TOYO®

SANITARY WARES

UPTO 12 YEAR WARRANTY

CE

CERTIFIED ISO 9001:2015 COMPANY

UPDATED MRP W.E.F. 09-03-2023

PRODUCT CATALOGUE
W.E.F.: 09.03. 2023

COMPLETE BATHROOM SOLUTIONS

Modern | Classy | Innovative

aroma of perfection & excellence

CERTIFICATE SERTIFIKA CERTIFICADO CERTIFICATO ZERTIFIKAT

CERTIFICATE OF COMPLIANCE

We hereby declare that the technical file of product complied with the requirement of directives Construction Products Directive [CPD] 89/106 EC

Manufacture

Name : TOYO SANITARY WARES PVT. LTD.

Address : W-5, SECTOR-11, NOIDA, UTTAR PRADESH 201301, INDIA

Product : SANITARY PRODUCTS

Complies with the requirements applicable to it

The Certification body has performed an audit of the above product quality system covering the design, manufacture and final inspection of the certified product. The quality system has been assessed, approved and is subject to continuous surveillance according to the directives Machinery Directive 2006/42/EC

This certificate is issued under the following conditions:

It applies only to the quality system maintained in the manufacture of above referenced models and it does not substitute the design or type-examination procedures, if requested.

1. The certificate remains valid until the manufacturing conditions or the quality systems are changed.
2. The certificate validity is conditioned by positive results or surveillance audits.
3. After fulfilling the relevant EU legislation, the manufacturer shall affix to each device, of the above referenced models.
4. The CE mark as shown above can be used, under the responsibility of the manufacturer, after completion of an EC Declaration of conformity and compliance with all relevant EC Directives. The statement is based on a single evaluation of one sample of above mentioned product. It does not imply an assessment of the whole production.

Certificate Number : IND-TWPL-21-124016

Initial Certification Date : 14 Oct 2021 Date of Expiry : 13 Oct 2024

1st Surveillance Date : 13 Oct 2022 2nd Surveillance Date : 13 Oct 2023

Verify the Certificate : www.ug-ac.org

Issued by INDCS Certification

Authorized Signatory

CAB Address : Maryland Avenue, SW Washington, D.C. 20202

This certificate remains the property of INDCS and must be returned to INDCS on Cancellation or Suspension of the certificate Validity of the certificate is subject to successful completion of surveillance audit. Further clarification regarding the scope of this certificate and the applicability of standard may be obtained by consulting the Organization.

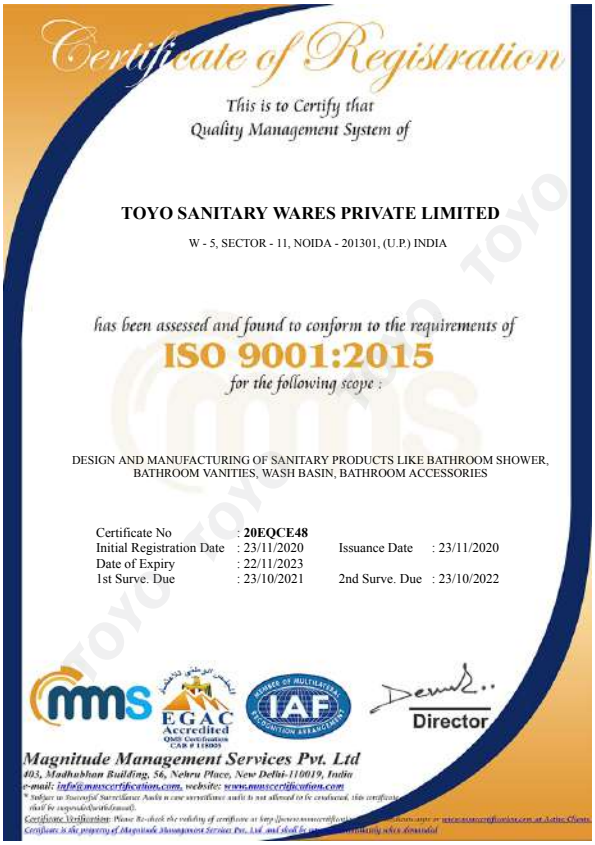

Certificate of Registration

This is to Certify that
Quality Management System of

TOYO SANITARY WARES PRIVATE LIMITED

W - 5, SECTOR - 11, NOIDA - 201301, (U.P.) INDIA

has been assessed and found to conform to the requirements of

ISO 9001:2015

for the following scope :

DESIGN AND MANUFACTURING OF SANITARY PRODUCTS LIKE BATHROOM SHOWER, BATHROOM VANITIES, WASH BASIN, BATHROOM ACCESSORIES

Certificate No : **20EQCE48**

Initial Registration Date : 23/11/2020 Issuance Date : 23/11/2020

Date of Expiry : 22/11/2023

1st Surve. Due : 23/10/2021 2nd Surve. Due : 23/10/2022

Director

Magnitude Management Services Pvt. Ltd

403, Madhuban Building, 56, Nehru Place, New Delhi-110019, India

e-mail: info@mmscertification.com, website: www.mmscertification.com

TOYO
SANITARY WARES

"Since 2008 through continuous experimentation and innovation, TOYO is now one of the most trusted brands known for 'Complete Bathroom Solutions'. We have our manufacturing unit equipped with latest technology machines to ensure micro perfection of each and every product. Our constant endeavor is to innovate and reinvent ourselves ahead of times and be an expert companion to the consumer in their journey from inspiration to implementation in the bathroom space.

We are proud to say that we are one of the largest manufacturers of bathroom vanities across India. TOYO offers a vast variety of products ranging from minimalistic to luxury that meets the international standards and latest trends so you can have the dream bathroom you desire at affordable prices. Our motto is to take sanitarywares into a new era of affordable luxury.

The success of TOYO is also driven by the fact that the company supports its products with an excellent after sales service network.

Our quality control team ensures that each and every piece of our products goes through stringent quality checks and not only that - the quality every raw material has to meet specified international parameters. We are committed to make superior quality products with excellent finishing and aesthetic designs that will make you feel proud as an owner of TOYO products.

The company has it's presence all across India and is also expanding it's international network. Owing to our offered high quality product range, we have become the foremost choice of our respected patrons. With the rising opulence and changing lifestyle of Indian Elite, Toyo has brought a tremendous change in the Sanitaryware Industry.

IMPORTANT

Graphics size & physical size of the products may vary slightly, TOYO reserves the right to modify or discontinue the models without prior notice. Due to printing, Color of the actual products may be slightly different from the picture shown. Everything is subject to actual product. We apologize if any size, model no. or color of the product is printed wrongly in the catalogue by mistake.

"A satisfied customer is the best business strategy of all."

Michael LeBouf

I believe, to achieve any success, sincerity must be total and absolute. Improvement is a continuous process and present achievements must lead to greater accomplishments in the future.

We are continuously experimenting and expanding with the new changing technology which ensures that the products are of highest quality and aesthetically pleasing. The products which were earlier imported are now moving towards our manufacturing plants in India with improved standards.

As Coco Chanel succinctly puts it, "In order to be irreplaceable one must always be different." We are proud to say that we are one of the largest manufacturers of bathroom vanities with such an extensive and exclusive variety around the globe.

We consistently strive to develop and upgrade our products with continual micro analysis of each and every function, finishing and packaging so every user feels satisfied with their purchase to the fullest.

I am entering Sanitarywares into a new era of Affordable Luxury so maximum people can relish it. Along with that we believe in providing prompt after sales service.

In my thought, best quality, prompt after sales service and affordable prices are the key points to success any business and the right track.

Finally I strongly believe 'Honesty is the best policy' in all aspects.

Anuj Agarwal
Founder

TOYO SANITARY WARES

INDEX

1.	WOODEN VANITIES	06-07
2.	PVC BATHROOM VANITIES	08-43
3.	SS BATHROOM VANITIES	44
4.	CERAMIC CABINET BASINS	45-47
5.	MARBLE TOPS	48-49
6.	BLACK SANITARY WARES	50-53
7.	WHITE SANITARY WARES	54-71
8.	CONCEALED CISTERNS	72
9.	EXPOSED CISTERNS	73
10.	CERAMIC ART BASINS	74-98
11.	DESIGNER FAUCETS	99-110
12.	HEALTH FAUCETS	111-112
13.	WASTE COUPLINGS	113
14.	MULTIFLOW DIVERTERS	114-116
15.	BODY JETS	117
16.	SHOWERS	118-127
17.	SHOWER PANELS	128-139
18.	SS / PVC MIRROR CABINETS	140-143
19.	LOOKING MIRRORS	143-146
20.	SENSOR PRODUCTS	147-152
21.	MANUAL SOAP DISPENSERS	153-155
22.	SS TOWEL RACKS & SS SHELVES	156
23.	SHOWER TUBES / SHOWER ARMS	157
24.	CONNECTION PIPES / BOTTLE TRAPS	158
25.	QUARTZ SINKS	159-167
26.	BRASS C.P. FITTINGS	168-186
27.	BRASS BATHROOM ACCESSORIES	187-193
28.	BRASS EXTENSION NIPPLES	194

TOYO Vanities are much more than products - they are an expression of love and reflect our understanding of life and creativity

M : 828-80 (32") / 828-70 (28")
S : 800 x 610 mm /700x610mm
C : White
Features : Solid Wood Material / Marble Top / Soft Close Doors / Wooden Mirror Frame

Mrp (Full Set) : 84200 /- / 78200/-

Mrp (Mirror) : 12800/- / 12800/-
Mrp (Basin & Top) : 16400/- / 15400/-
Mrp (Main Cabinet) : 55000/- / 50000/-

M : 828-60 (24")
S : 600 x 610 mm
C : White
Features : Solid Wood Material / Marble Top / Soft Close Doors / Wooden Mirror Frame

Mrp (Full Set) : 72400/-

Mrp (Mirror) : 12800/-
Mrp (Basin & Top) : 14600/-
Mrp (Main Cabinet) : 45000/-

Model : 6938-80 (32")
Size : 800 x 480 mm
Color : White & Black
Feature : Solid Wood Material, Soft Close Drawers, Marble Top / Solid Wood Mirror Frame

Mrp (Full Set) : 76800/-

Mrp (Mirror) : 12800/-
Mrp (Only Basin) : 5800/-
Mrp(Marble Top) : 8200/-
Mrp (Main Cabinet) : 50000/-

Model : 6938-70 (28")
Size : 700 x 480 mm
Color : White & Black
Feature : Solid Wood Material, Soft Close Drawers, Marble Top / Solid Wood Mirror Frame

Mrp (Full Set) : 69400/-

Mrp (Mirror) : 12800/-
Mrp (Only Basin) : 5800/-
Mrp (Marble Top) : 5800/-
Mrp (Main Cabinet) : 45000/-

Features Demonstration of TOYO PVC Bathroom Vanities

TOYO SS-304 SOFT CLOSE HINGES

Rust Resistant | Smooth | Extra Strong

The new innovation, specially developed for bathroom and kitchen furniture.

What's the Problem being faced in hinges?
Bathrooms, where it has to be always in contact of moisture and water, normal hinges gets rusted, it's functioning gets stopped, doors get blocked and furniture gets damaged if opened forcefully.

Solution by TOYO for hinges
We are providing the TOYO Hinges in all our vanities which are highly rust resistant, of superior strength and smooth functioning. Each and every parts of our Hinges are made from SS-304 and brass.

TOYO SOFT CLOSE HEAVY DUTY CHANNELS

Durable | Smooth | Extra Strong

Special technology, just push the drawer, it will close automatically, will take its position in a perfect manner. The action is so smooth that it does not need any effort.

It's 100% Water proof, Termite Proof and Fire Resistant. The best material for bathroom furniture with international quality standard, made from all virgin raw materials.

Model : 5101B

Mrp (Full Set) : 70700/-

Mirror Cabinet : 5101	Mrp : 20900/-
Basin : SUC-40	Mrp : 6400/-
Marble Top: 031-WM or 031-BM	Mrp : 10400/-
Main Cabinet : 5101-F	Mrp : 33000/-

Model : 5101 C

Mrp (Full Set) : 74100/-

Mirror Cabinet : 5101	Mrp : 20900/-
Basin : 551-Golden	Mrp : 9800/-
Marble Top: 031-WM or 031-BM	Mrp : 10400/-
Main Cabinet : 5101-F	Mrp : 33000/-

Model : 5101A-F (40")
Color : Wooden Brown
Size : 1000 x 470 mm
Basin : G-10045 (40") - White

Mrp (Full Set) : 64900/-
Mrp (Mirror Cabinet) : 20900/-
Mrp (Only Basin) : 11000/-
Mrp (Main Cabinet) : 33000/-

Model : 5102A-F (40")
Color : White & Black
Size : 1000 x 470 mm
Basin : G-10045 (40") - White

Mrp (Full Set) : 64900/-
Mrp (Mirror Cabinet) : 20900/-
Mrp (Only Basin) : 11000/-
Mrp (Main Cabinet) : 33000/-

Model : 5101B-W (40")
Color : Wooden Brown
Size : 1000 X 470 mm
Basin : SUC-40
Marble Top: 031-WM or 031-BM

Mrp (Full Set) : 66700/-
Mrp (Mirror Cabinet) : 20900/-
Mrp (Marble Top) : 10400/-
Mrp (Only Basin) : 6400/-
Mrp (Main Cabinet) : 29000/-

Model : 5102A-W (40")
Color : White & Black
Size : 1000 X 470 mm
Basin : G-10045 (40")-White

Mrp (Full Set) : 60900/-
Mrp (Mirror Cabinet) : 20900/-
Mrp (Only Basin) : 11000/-
Mrp (Main Cabinet) : 29000/-

TOYO
SANITARY WARES

800 mm (32")
Floor Mounted Series

PVC Bathroom Vanities

TOYO vanities lead fashion with exquisite workmanship and are characterised by excellent quality and a stylish appearance.

Model : 5249-F (32")
Color : White
Size : 810 X 500 mm
Basin : CB-801 Creamy Sil. Mrble

Mrp (Full Set)	: 54100/-
Mrp (Mirror)	: 9100/-
Mrp (Only Basin)	: 15000/-
Mrp (Main Cabinet)	: 30000/-

Model : 5249A-F (32")
Color : White & Silver
Size : 810 X 500 mm
Basin : CB-801 Creamy Sil.Mrble

Mrp (Full Set)	: 56100/-
Mrp (Mirror)	: 9100/-
Mrp (Only Basin)	: 15000/-
Mrp (Main Cabinet)	: 32000/-

Model : 5253-F (32")
Color : Black Matt
Size : 810 X 500 mm
Basin : CB-804 Black Marble

Mrp (Full Set)	: 65000/-
Mrp (Mirror Cabinet)	: 18000/-
Mrp (Only Basin)	: 15000/-
Mrp (Main Cabinet)	: 32000/-

Model : 5254-F (32")
Color : White & Greenish Gold
Size : 800 X 500 mm
Basin : H-8050- White

Mrp (Full Set)	: 49800/-
Mrp (Mirror Cabinet)	: 16000/-
Mrp (Only Basin)	: 7800/-
Mrp (Main Cabinet)	: 26000/-

TOYO
SANITARY WARES

800 mm (32")
Floor Mounted Series

PVC
Bathroom Vanities

A Perfect Combination of High Fashion & Exquisite Workmanship to Provide you a Royal Bathing Experience

Model	: 5211 A - F (32")	Mrp (Full Set)	: 47900/-
Size	: 810 X 470 mm	Mrp (Mirror Cabinet)	: 15000/-
Color	: White & Black	Mrp (Only Basin)	: 6900/-
Basin	: G-8045 (32") - Wh.	Mrp (Main Cabinet)	: 26000/-

Model	: 5211 B - F (32")	Mrp (Full Set)	: 47900/-
Size	: 810 X 470 mm	Mrp (Mirror Cabinet)	: 15000/-
Color	: Black & Safron	Mrp (Only Basin)	: 6900/-
Basin	: G-8045 (32") - Wh.	Mrp (Main Cabinet)	: 26000/-

Model	: 5232 - F (32")	Mrp (Full Set)	: 48900/-
Size	: 810 X 470 mm	Mrp (Mirror Cabinet)	: 16000/-
Color	: White & Copper	Mrp (Only Basin)	: 6900/-
Basin	: G-8045 (32") - Wh.	Mrp (Main Cabinet)	: 26000/-

Model	: 5242- F (32")	Mrp (Full Set)	: 48900/-
Size	: 810 X 470 mm	Mrp (Mirror Cabinet)	: 15000/-
Color	: White Texture & Cherry	Mrp (Only Basin)	: 6900/-
Basin	: G-8045 (32") - Wh.	Mrp (Main Cabinet)	: 27000/-

Model : 52001 - F (32")
Color : Dark Grey Wooden Finish
Size : 810 x 470 mm
Basin : G-8045 (32") - White

Mrp (Full Set) : 51900/-
Mrp (Mirror Cabinet) : 18000/-
Mrp (Only Basin) : 6900/-
Mrp (Main Cabinet) : 27000/-

Model : 52002 -F (32")
Color : White & Brown
Size : 810 X 470 mm
Basin : G-8045 (32") - White

Mrp (Full Set) : 42900/-
Mrp(Mirror Cabinet) : 15000/-
Mrp (Only Basin) : 6900/-
Mrp (Main Cabinet) : 21000/-

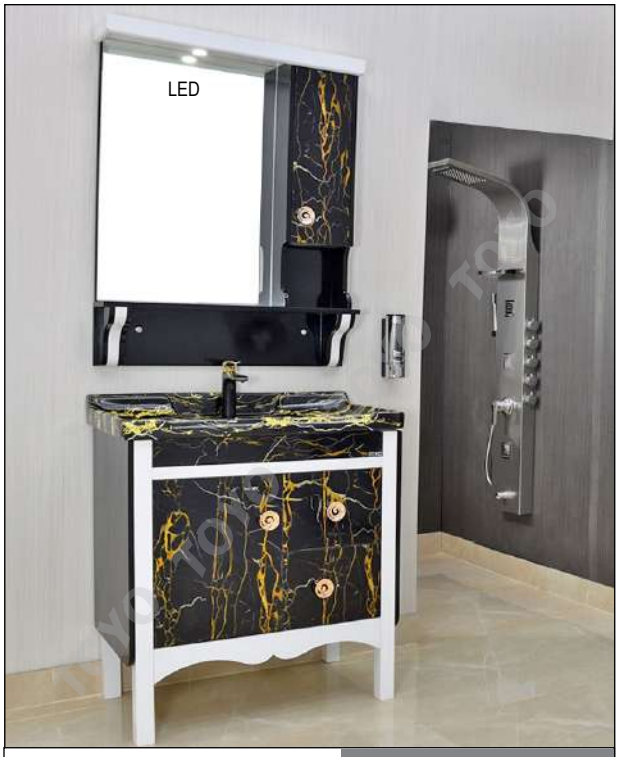

Model : 52003 B-F (32")
Color : White & Black Marble
Size : 810 x 470 mm
Basin : G-80 (32") - Black Marble

Mrp (Full Set) : 56400/-
Mrp (Mirror Cabinet) : 16000/-
Mrp (Only Basin) : 12400/-
Mrp (Main Cabinet) : 28000/-

Model : 52007-F (32")
Color : Brown & Wooden Brown
Size : 810 X 470 mm
Basin : G-8045 (32") - White

Mrp (Full Set) : 47900/-
Mrp (Mirror Cabinet) : 15000/-
Mrp (Only Basin) : 6900/-
Mrp (Main Cabinet) : 26000/-

TOYO SANITARY WARES

800 mm (32") / 700 mm (28")
Floor Mounted Series

PVC Bathroom Vanities

MRP

Model: 5212 A-F (32")
Color : White Texture
Size : 810 X 470 mm
Basin : G-8045 (32")-Wh.

Full Set : 29900/-
Only Basin : 6900/-
Main Cabinet : 23000/-

MRP

Model: 5212 B-F (32")
Color : Brown Texture
Size : 810 X 470 mm
Basin : G-8045 (32")-Wh.

Full Set : 29900/-
Only Basin : 6900/-
MainCabinet : 23000/-

MRP

Model: 5213 A-F (32")
Color : Wh., Blk & Red
Size : 810 X 470 mm
Basin : G-8045 (32")-Wh.

Full Set : 29900/-
Only Basin : 6900/-
Main Cabinet : 23000/-

MRP

Model: 5213 B-F (32")
Color : Ivory Brown Tex.
Size : 810 X 470 mm
Basin : 80-E (32")-Ivory

Full Set : 29900/-
Only Basin : 6900/-
Main Cabinet : 23000/-

MRP

Model: 5216-F (32")
Color : White & Safron
Size : 810 X 470 mm
Basin : G-8045 (32")-Wh.

Full Set : 29900/-
Only Basin) : 6900/-
Main Cabinet : 23000/-

MRP

Model: 5217-F (32")
Color : Black Marble
Size : 810 X 470 mm
Basin : G-8045 (32")-Wh.

Full Set : 29900/-
Only Basin) : 6900/-
Main Cabinet : 23000/-

MRP

Model: 5327 A-F (28")
Color : White Texure
Size : 710 X 470mm
Basin : G-7045 (28")-Wh.

Full Set : 26900/-
Only Basin : 6900/-
Main Cabinet : 20000/-

MRP

Model: 5327 B-F (28")
Color : Brown Texure
Size : 710 X 470mm
Basin : G-7045 (28")-Wh.

Full Set : 26900/-
Only Basin : 6900/-
Main Cabinet : 20000/-

MRP

Model: 5327 C-F (28")
Color : Full White
Size : 710 X 470 mm
Basin : G-7045 (28")-Wh.

Full Set : 26900/-
Only Basin : 6900/-
Main Cabinet : 20000/-

Catering to the tastes of the exclusive few who apprciate good things in life.

Model	: 5211 A-W (32")	Mrp (Full Set)	: 44900/-
Color	: White & Black	Mrp (Mirror Cabinet)	: 15000/-
Size	: 810 X 470 mm	Mrp (Only Basin)	: 6900/-
Basin	: G-8045 (32")-Wh.	Mrp (Main Cabinet)	: 23000/-

Model	: 5211 B-W (32")	Mrp (Full Set)	: 44900/-
Color	: Black & Safron	Mrp (Mirror Cabinet)	: 15000/-
Size	: 810 X 470 mm	Mrp (Only Basin)	: 6900/-
Basin	: G-8045 (32")-Wh.	Mrp (Main Cabinet)	: 23000/-

Model	: 5239 B-W (32")	Mrp (Full Set)	: 49400/-
Color	: White & Black	Mrp (Mirror Cabinet)	: 14000/-
Size	: 810 X 470 mm	Mrp (Only Basin)	: 12400/-
Basin	: G-80 (32")-Blk Mrble.	Mrp (Main Cabinet)	: 23000/-

Model	: 5240-W (32")	Mrp (Full Set)	: 45900/-
Color	: White & Ivory Tex.	Mrp (Mirror Cabinet)	: 16000/-
Size	: 810 X 470 mm	Mrp (Only Basin)	: 6900/-
Basin	: G-8045 (32")-Wh.	Mrp (Main Cabinet)	: 23000/-

Model	: 5246A-W (32")
Color	: White
Size	: 810 X 470 mm
Basin	: G-8045 (32")-White

Mrp (Full Set)	: 46900/-
Mrp (Mirror Cabinet)	: 16000/-
Mrp (Only Basin)	: 6900/-
Mrp (Main Cabinet)	: 24000/-

Model	: 5246B-W (32")
Color	: Black & Gold
Size	: 810 X 470 mm
Basin	: G-80 (32")-Blk. Mrbl.

Mrp (Full Set)	: 52400/-
Mrp (Mirror Cabinet)	: 16000/-
Mrp (Only Basin)	: 12400/-
Mrp (Main Cabinet)	: 24000/-

Model	: 5242-W (32")
Color	: White Tex. & Cherry
Size	: 810 X 470 mm
Basin	: G-8045 (32")-Wh.

Mrp (Full Set)	: 44900/-
Mrp (Mirror Cabinet)	: 15000/-
Mrp (Only Basin)	: 6900/-
Mrp (Main Cabinet)	: 23000/-

Model	: 52022-W (32")
Color	: White & Black
Size	: 810 X 470 mm
Basin	: G-8045 (32")-Wh.

Mrp (Full Set)	: 47900/-
Mrp (Mirror Cabinet)	: 18000/-
Mrp (Only Basin)	: 6900/-
Mrp (Main Cabinet)	: 23000/-

Model	: 52004 - W (32")	Mrp (Full Set)	: 44900/-
Color	: Light Grey Texture	Mrp (Mirror Cabinet)	: 15000/-
Size	: 810 X 470 mm	Mrp (Only Basin)	: 6900/-
Basin	: G-8045 (32")-Wh.	Mrp (Main Cabinet)	: 23000/-

Model	: 52007 - W (32")	Mrp (Full Set)	: 44900/-
Color	: Wooden Brown	Mrp (Mirror Cabinet)	: 15000/-
Size	: 810 X 470 mm	Mrp (Only Basin)	: 6900/-
Basin	: G-8045 (32")-Wh.	Mrp (Main Cabinet)	: 23000/-

Model	: 5227-W (32")	Mrp (Full Set)	: 30200/-
Color	: Full White	Mrp (Only Mirror)	: 3300/-
Size	: 810 X 470 mm	Mrp (Only Basin)	: 6900/-
Basin	: G-8045 (32")-Wh.	Mrp (Main Cabinet)	: 20000/-

Model	: 5348 - W (28")	Mrp (Full Set)	: 46900/-
Color	: White	Mrp (Mirror Cabinet)	: 17000/-
Size	: 710 X 460 mm	Mrp (Only Basin)	: 6900/-
Basin	: G-7045 (28")-Wh.	Mrp (Main Cabinet)	: 23000/-

TOYO
SANITARY WARES

600 mm (24")
Floor Mounted Series

PVC
Bathroom Vanities

we Shape our homes &
then our home shapes us

Model	: 5301 - F (28")
Color	: White & Brown
Size	: 710 X 470 mm
Basin	: G-7045 (28")-Wh.

Mrp (Full Set)	: 45900/-
Mrp (Mirror)	: 14000/-
Mrp (Only Basin)	: 6900/-
Mrp (Main Cabinet)	: 25000/-

Model	: 54002 -F (24")
Color	: Grey & Dark Grey
Size	: 610 X 460 mm
Basin	: G-6045 -Wh.

Mrp (Full Set)	: 37000/-
Mrp (Mirror Cabinet)	: 12500/-
Mrp (Only Basin)	: 4600/-
Mrp (Main Cabinet)	: 19900/-

Model	: 54003 -F (24")
Color	: Brown & Wooden Br.
Size	: 610 X 460 mm
Basin	: G-6045 (24")-Wh.

Mrp (Full Set)	: 37000/-
Mrp (Mirror Cabinet)	: 12500/-
Mrp (Only Basin)	: 4600/-
Mrp (Main Cabinet)	: 19900/-

Model	: 54004 -F (24")
Color	: Light Grey & Grey Tex.
Size	: 610 X 460 mm
Basin	: G-6045 (24")-Wh.

Mrp (Full Set)	: 37900/-
Mrp (Mirror Cabinet)	: 12500/-
Mrp (Only Basin)	: 4600/-
Mrp (Main Cabinet)	: 20800/-

Model : 54008 B-F (24")
Color : White & Blk. Marble
Size : 610 X 460 mm
Basin : G-60 (24")-Blk Mrbl

Mrp (Full Set) : 42000/-
Mrp (Mirror Cabinet) : 12500/-
Mrp (Only Basin) : 9600/-
Mrp (Main Cabinet) : 19900/-

Model : 54009 B-F (24")
Color : Blue & Brocade Marble
Size : 610 X 460 mm
Basin : G-60 (24")-Brocade Mrbl.

Mrp (Full Set) : 42000/-
Mrp (Mirror Cabinet) : 12500/-
Mrp (Only Basin) : 9600/-
Mrp (Main Cabinet) : 19900/-

Model : 54010 B-F (24")
Color : Dark Grey & Cloudy
Size : 610 x 460 mm
Basin : G-60 (24")-Grey Cloudy

Mrp (Full Set) : 42000/-
Mrp (Mirror Cabinet) : 12500/-
Mrp (Only Basin) : 9600/-
Mrp (Main Cabinet) : 19900/-

Model : 54007- F (24")
Color : Black & Copper
Size : 610 X 460 mm
Basin : G-6045 (24")-White

Mrp (Full Set) : 37000/-
Mrp (Mirror Cabinet) : 12500/-
Mrp (Only Basin) : 4600/-
Mrp (Main Cabinet) : 19900/-

Model : 5412 A-F (24")
Color : Silver Texture
Size : 610 X 460 mm
Basin : 60-E or G-6045

Mrp (Full Set) : 36100/-
Mrp (Mirror Cabinet) : 11600/-
Mrp (Only Basin) : 4600/-
Mrp (Main Cabinet) : 19900/-

Model : 5412 B-F (24")
Color : Brown Texture
Size : 610 X 460 mm
Basin : 60-E or G-6045

Mrp (Full Set) : 36100/-
Mrp (Mirror Cabinet) : 11600/-
Mrp (Only Basin) : 4600/-
Mrp (Main Cabinet) : 19900/-

Model : 5414 A-F (24")
Color : Blk. & White Texture
Size : 610 X 460 mm
Basin : 60-E or G-6045

Mrp (Full Set) : 36100/-
Mrp (Mirror Cabinet) : 11600/-
Mrp (Only Basin) : 4600/-
Mrp (Main Cabinet) : 19900/-

Model : 5414 C-F (24")
Color : Brown & Ivory Texture
Size : 610 X 460 mm
Basin : 60-E or G-6045

Mrp (Full Set) : 36100/-
Mrp (Mirror Cabinet) : 11600/-
Mrp (Only Basin) : 4600/-
Mrp (Main Cabinet) : 19900/-

Model : 5414 D-F (24")
Color : Black & Silver Tex.
Size : 610 X 460 mm
Basin : 60-E or G-6045

Mrp (Full Set) : 36100/-
Mrp (Mirror Cabinet) : 11600/-
Mrp (Only Basin) : 4600/-
Mrp (Main Cabinet) : 19900/-

Model : 5435 A- F (24")
Color : White & Black
Size : 610 X 460 mm
Basin : G-6045 or 60-E

Mrp (Full Set) : 28000/-
Mrp (Only Mirror) : 1500/-
Mrp (Side Cabinet) : 5600/-
Mrp (Only Basin) : 4600/-
Mrp (Main Cabinet) : 16300/-

Model : 5435 B-F (24")
Color : Black & Red
Size : 610 X 460 mm
Basin : 60-E or G-6045

Mrp (Full Set) : 28000/-
Mrp (Only Mirror) : 1500/-
Mrp (Side Cabinet) : 5600/-
Mrp (Only Basin) : 4600/-
Mrp (Main Cabinet) : 16300/-

Model : 5435 C-F (24")
Color : White & Blue
Size : 610 X 460 mm
Basin : G-6045 or 60-E

Mrp (Full Set) : 28000/-
Mrp (Only Mirror) : 1500/-
Mrp (Side Cabinet) : 5600/-
Mrp (Only Basin) : 4600/-
Mrp (Main Cabinet) : 16300/-

Model : 5436-F (24")
Color : White & Firozi
Size : 610 X 460 mm
Basin : G-6045 or 60-E

Mrp (Full Set) : 33400/-
Mrp (Mirror Cabinet) : 13200/-
Mrp (Only Basin) : 4600/-
Mrp (Main Cabinet) : 15600/-

Model : 5438 B-F (24")
Color : White
Size : 610 X 460 mm
Basin : G-60-Golden

Mrp (Full Set) : 42000/-
Mrp (Mirror Cabinet) : 11600/-
Mrp (Only Basin) : 9600/-
Mrp (Main Cabinet) : 20800/-

Model : 5448 A-F (24")
Color : White
Size : 610 X 460 mm
Basin : G-6045-White

Mrp (Full Set) : 41500/-
Mrp (Mirror Cabinet) : 16000/-
Mrp (Only Basin) : 4600/-
Mrp (Main Cabinet) : 20900/-

Model : 5448 B-F (24")
Color : Black & Golden
Size : 610 X 460 mm
Basin : G-60-Black Marble

Mrp (Full Set) : 46500/-
Mrp (Mirror Cabinet) : 16000/-
Mrp (Only Basin) : 9600/-
Mrp (Main Cabinet) : 20900/-

Model	: 5466 -F (24")	Mrp (Full Set)	: 24900/-
Color	: Brown Wooden	Mrp (Only Mirror)	: 3000/-
Size	: 610 X 460 mm	Mrp (Only Basin)	: 4600/-
Basin	: G-6045 or 60-E	Mrp (Main Cabinet)	: 17300/-

Model	: 5467 -F (24")	Mrp (Full Set)	: 24900/-
Color	: Grey Wooden	Mrp (Only Mirror)	: 3000/-
Size	: 610 X 460 mm	Mrp (Only Basin)	: 4600/-
Basin	: G-6045 or 60-E	Mrp (Main Cabinet)	: 17300/-

Model	: 5411 A- F (24")	Mrp (Full Set)	: 27100/-
Color	: White & Black	Mrp (Only Mirror)	: 3000/-
Size	: 610 X 460 mm	Mrp (Only Basin)	: 4600/-
Basin	: 60-E or G-6045-Wh.	Mrp (Main Cabinet)	: 19500/-

Model	: 5411 B-F (24")	Mrp (Full Set)	: 27100/-
Color	: Black & Safron	Mrp (Only Mirror)	: 3000/-
Size	: 610 X 460 mm	Mrp (Only Basin)	: 4600/-
Basin	: 60-E or G-6045-Wh.	Mrp (Main Cabinet)	: 19500/-

TOYO
SANITARY WARES

600 mm (24")
Floor Mounted Series

PVC
Bathroom Vanities

Model	: 5440 - F (24")	Mrp (Full Set)	: 28500/-
Color	: Wh. Blk Tex. & Golden	Mrp (Mirror - Shelf)	: 5100/-
Size	: 610 X 460 mm	Mrp (Only Basin)	: 4600/-
Basin	: G-6045 or 60-E	Mrp (Main Cabinet)	: 18800/-

Model	: 5442- F (24")	Mrp (Full Set)	: 31200/-
Color	: White Tex. & Cherry	Mrp (Mirror - Shelf)	: 6000/-
Size	: 610 X 460 mm	Mrp (Only Basin)	: 4600/-
Basin	: G-6045 or 60-E	Mrp(Main Cabinet)	: 20600/-

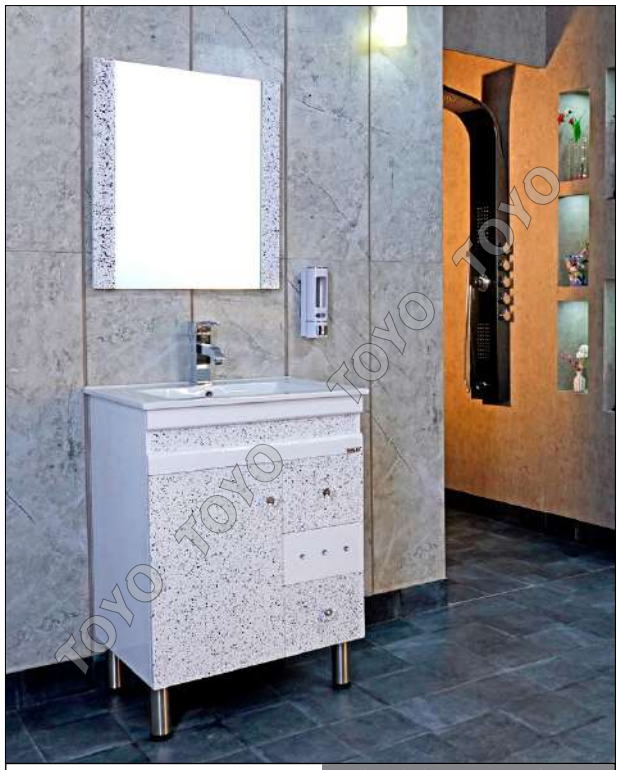

Model	: 5427 A-F (24")	Mrp (Full Set)	: 24000/-
Color	: White Texture	Mrp (Only Mirror)	: 3000/-
Size	: 610 X 460 mm	Mrp (Only Basin)	: 4600/-
Basin	: 60-E or G-6045	Mrp (Main Cabinet)	: 16400/-

Model	: 5427 B-F (24")	Mrp (Full Set)	: 24000/-
Color	: Brown Texture	Mrp (Only Mirror)	: 3000/-
Size	: 610 X 460 mm	Mrp (Only Basin)	: 4600/-
Basin	: 60-E or G-6045	Mrp (Main Cabinet)	: 16400/-

Model	: 5427 C-F (24")	Mrp (Full Set)	: 24000/-
Color	: Purple Texture	Mrp (Only Mirror)	: 3000/-
Size	: 610 X 460 mm	Mrp (Only Basin)	: 4600/-
Basin	: 60-E or G-6045	Mrp (Main Cabinet)	: 16400/-

Model	: 5427 D-F (24")	Mrp (Full Set)	: 24000/-
Color	: Red Texture	Mrp (Only Mirror)	: 3000/-
Size	: 610 X 460 mm	Mrp (Only Basin)	: 4600/-
Basin	: 60-E or G-6045	Mrp (Main Cabinet)	: 16400/-

Model	: 5427 E-F (24")	Mrp (Full Set)	: 24000/-
Color	: Green Texture	Mrp (Only Mirror)	: 3000/-
Size	: 610 X 460 mm	Mrp (Only Basin)	: 4600/-
Basin	: 60-E or G-6045	Mrp (Main Cabinet)	: 16400/-

Model	: 5427 F-F (24")	Mrp (Full Set)	: 24000/-
Color	: Blue Texture	Mrp (Only Mirror)	: 3000/-
Size	: 610 X 460 mm	Mrp (Only Basin)	: 4600/-
Basin	: 60-E or G-6045	Mrp (Main Cabinet)	: 16400/-

TOYO SANITARY WARES

600 mm (24")
Floor Mounted Series

PVC Bathroom Vanities

MRP

M : 5427 G - F
S : 610 X 460 mm
C : Full White
B : G-6045 or 60-E

Full Set : 21000/-
Mrp (Only Basin) : 4600/-
Mrp(Main Cabinet) : 16400/-

MRP

M : 5427 i - F (24")
S : 610 X 460 mm
C : Blk. & Wh. Plain
B : G-6045 or 60-E

Full Set : 21000/-
Mrp (Only Basin) : 4600/-
Mrp(Main Cabinet) : 16400/-

MRP

M : 5427 J-F (24")
S : 610 X 460 mm
C : Black & Red
B : G-6045 or 60-E

Full Set : 21000/-
Mrp (Only Basin) : 4600/-
Mrp(Main Cabinet) : 16400/-

MRP

M : 5428 - F (24")
S : 610 X 460 mm
C : White & Black
B : G-6045 or 60-E

Full Set : 22200/-
Mrp (Only Basin) : 4600/-
Mrp(Main Cabinet) : 17600/-

MRP

M : 5429 - F (24")
S : 610 X 460 mm
C : White & Black
B : G-6045 or 60-E

Full Set : 22600/-
Mrp (Only Basin) : 4600/-
Mrp(Main Cabinet) : 18000/-

MRP

M : 5461 A-F (24")
S : 610 X 460 mm
C : White & Blue
B : 60-E or G-6045

Full Set : 22200/-
Mrp (Only Basin) : 4600/-
Mrp(Main Cabinet) : 17600/-

MRP

M : 5461 B-F (24")
S : 610 X 460 mm
C : Red & Black
B : 60-E or G-6045

Full Set : 22200/-
Only Basin) : 4600/-
Main Cabinet : 17600/-

MRP

M : 5462 - F (24")
S : 610 X 460 mm
C : ivory & Brown
B : G-6045 or 60-E

Full Set : 22200/-
Only Basin) : 4600/-
Main Cabinet : 17600/-

MRP

M : 5463-F (24")
S : 610 X 460 mm
C : Wh, Red & Blk.
B : G-6045 or 60-E

Full Set : 22200/-
Mrp (Only Basin) : 4600/-
Mrp(Main Cabinet) : 17600/-

TOYO SANITARY WARES

600 mm (24")
Floor Mounted Series

PVC Bathroom Vanities

Model : 5468 - F (24")
Color : White & Black
Size : 610 X 460 mm
Basin : G-6045 or 60-E

Mrp (Full Set) : 21300/-
Mrp (Only Basin) : 4600/-
Mrp (Main Cabinet) : 16700/-

MRP

M : 5464 A -F (24")
S : 610 X 460 mm
C : Black Marble
B : G-60-Blk. Mrbl

Mrp(Full Set) : 28200/-
Mrp(Only Basin) : 9600/-
Mrp (Main Cabinet) : 18600/-

MRP

M : 5464 B -F (24")
S : 610 X 460 mm
C : White Marble
B : G-60-Wh. Mrbl

Mrp(Full Set) : 28200/-
Mrp(Only Basin) : 9600/-
Mrp (Main Cabinet) : 18600/-

MRP

M : 5469 - F (24")
S : 610 X 460 mm
C : Wh. & Grey
B : G-6045 or 60-E

Mrp(Full Set) : 23100/-
Mrp(Only Basin) : 4600/-
Mrp (Main Cabinet) : 18500/-

MRP

M : 5418 - F (24")
S : 610 X 460 mm
C : Full White
B : G-6045 or 60-E

Mrp(Full Set) : 22200/-
Mrp(Only Basin) : 4600/-
Mrp (Main Cabinet) : 17600/-

MRP

M : 5426 -F (24")
S : 610 X 460 mm
C : White & Black
B : G-6045 or 60-E

Mrp(Full Set) : 20400/-
Mrp(Only Basin) : 4600/-
Mrp (Main Cabinet) : 15800/-

TOYO
SANITARY WARES

600 mm (24")
Wall Mounted Series

PVC
Bathroom Vanities

The details are not only the details. They make the design

Model	: 5446 A-W (24")	Mrp (Full Set) : 38000/-
Color	: White	Mrp (Mirror Cabinet) : 15000/-
Size	: 610 X 460 mm	Mrp (Only Basin) : 4600/-
Basin	: G-6045-White	Mrp (Main Cabinet) : 18400/-

Model	: 5446 B-W (24")	Mrp (Full Set) : 43000/-
Color	: Black & Golden	Mrp (Mirror Cabinet) : 15000/-
Size	: 610 X 460 mm	Mrp (Only Basin) : 9600/-
Basin	: G-60-Black Marble	Mrp (Main Cabinet) : 18400/-

Model	: 5448 A-W (24")	Mrp (Full Set) : 39000/-
Color	: White	Mrp (Mirror Cabinet) : 16000/-
Size	: 610 X 460 mm	Mrp (Only Basin) : 4600/-
Basin	: G-6045-White	Mrp (Main Cabinet) : 18400/-

Model	: 5448 B-W (24")	Mrp (Full Set) : 44000/-
Color	: Black & Golden	Mrp (Mirror Cabinet) : 16000/-
Size	: 610 X 460 mm	Mrp (Only Basin) : 9600/-
Basin	: G-60-Black Mrbl	Mrp (Main Cabinet) : 18400/-

Model : 5439A-W (24")	Mrp (Full Set) : 34300/-
Color : White & Firozi	Mrp (Mirror Cabinet) : 12700/-
Size : 610 X 460 mm	Mrp (Only Basin) : 4600/-
Basin : G-6045-White	Mrp (Main Cabinet) : 17000/-

Model : 5439B-W (24")	Mrp (Full Set) : 39300/-
Color : White & Black	Mrp (Mirror Cabinet) : 12700/-
Size : 610 X 460 mm	Mrp (Only Basin) : 9600/-
Basin : G-60-Black Marble	Mrp (Main Cabinet) : 17000/-

Model : 5442- W (24")	Mrp (Full Set) : 28700/-
Color : Wh. T. & Cherry	Mrp (Mirror-Shelf) : 6000/-
Size : 610 X 460 mm	Mrp (Only Basin) : 4600/-
Basin : G-6045-White	Mrp (Main Cabinet) : 18100/-

Model : 5465 - W (24")	Mrp (Full Set) : 21900/-
Color : Full Br.With SS Strip	Mrp (Only Mirror) : 3300/-
Size : 610 X 460 mm	Mrp (Only Basin) : 4600/-
Basin : G-6045-White	Mrp (Main Cabinet) : 14000/-

TOYO SANITARY WARES

600 mm (24")
Wall Mounted Series

PVC Bathroom Vanities

MRP

Model : 5411 A-W (24")
Color : White & Black
Size : 610 X 460 mm
Basin : G-6045-Wh.or 60-E

Full Set : 24600/-
Mirror : 3000/-
Only Basin : 4600/-
Main Cabinet : 17000/-

MRP

Model : 5411 B-W (24")
Color : Black & Safron
Size : 610 X 460 mm
Basin : G-6045-Wh. or 60-E

Full Set : 24600/-
Mirror : 3000/-
Only Basin : 4600/-
Main Cabinet : 17000/-

MRP

Model : 5411 C-W (24")
Color : Bluish Grey
Size : 610 X 460 mm
Basin : G-6045-Wh. or 60-E

Full Set : 24600/-
Mirror : 3000/-
Only Basin : 4600/-
Main Cabinet : 17000/-

MRP

Model : 5427 A-W (24")
Color : White Texture
Size : 610 X 460 mm
Basin : 60-E or G-6045

Full Set : 22400/-
Mirror : 3000/-
Only Basin : 4600/-
Main Cabinet : 14800/-

MRP

Model : 5427 B-W (24")
Color : Brown Texture
Size : 610 X 460 mm
Basin : 60-E or G-6045

Full Set : 22400/-
Mirror : 3000/-
Only Basin : 4600/-
Main Cabinet : 14800/-

MRP

Model : 5427 D-W (24")
Color : Red Texture
Size : 610 X 460 mm
Basin : 60-E or G-6045

Full Set : 22400/-
Mirror : 3000/-
Only Basin : 4600/-
Main Cabinet : 14800/-

MRP

Model : 5427 C-W (24")
Color : Full White
Size : 610 X 460 mm
Basin : G-6045-Wh. or 60-E

Full Set : 22700/-
Mirror : 3300/-
Only Basin : 4600/-
Main Cabinet : 14800/-

MRP

Model : 5466 -W (24")
Color : Brown Wooden
Size : 610 X 460 mm
Basin : G-6045-Wh. or 60-E

Full Set : 23200/-
Mirror : 3000/-
Only Basin : 4600/-
Main Cabinet : 15600/-

MRP

Model : 5467 -W (24")
Color : Grey Wooden
Size : 610 X 460 mm
Basin : G-6045-Wh. or 60-E

Full Set : 23200/-
Mirror : 3000/-
Only Basin : 4600/-
Main Cabinet : 15600/-

TOYO SANITARY WARES

560 mm (22")
Floor Mounted Series

PVC Bathroom Vanities

MRP

Model : 5401 -F (22")
Color : Brown Wooden
Size : 560 x 430 mm
Basin : 2217

Mrp(Full Set) : 14300/-
Mrp(Only Basin) : 2300/-
Mrp (Main Cabinet) : 12000/-

MRP

M : 5404 A-F (22")
C : White & Black
S : 560 x 430 mm
B : 2217

Mrp(Full Set) : 13800/-
Mrp(Only Basin) : 2300/-
Mrp (Main Cabinet) : 11500/-

MRP

M : 5404 B-F (22")
C : Red & Black
S : 560 x 430 mm
B : 2217

Mrp(Full Set) : 13800/-
Mrp(Only Basin) : 2300/-
Mrp (Main Cabinet) : 11500/-

MRP

Ml : 5404 C-F (22")
C : Wh. & Green
S : 560 x 430 mm
B : 2217

Mrp(Full Set) : 13800/-
Mrp(Only Basin) : 2300/-
Mrp (Main Cabinet) : 11500/-

MRP

M : 5404 D-F (22")
C : Wh. & L. Blue
S : 560 x 430 mm
B : 2217

Mrp(Full Set) : 13800/-
Mrp(Only Basin) : 2300/-
Mrp (Main Cabinet) : 11500/-

MRP

M : 5410-F (22")
C : White & Brown
S : 560 x 430 mm
B : 2217

Mrp(Full Set) : 14000/-
Mrp(Only Basin) : 2300/-
Mrp (Main Cabinet) : 11700/-

TOYO SANITARY WARES

560 mm (22")
Floor Mounted Series

PVC Bathroom Vanities

MRP

M : 5405 B-F (22")
C : White & Blue
S : 560 x 430 mm
B : 2217

Mrp(Full Set) : 13800/-
Mrp(Only Basin) : 2300/-
Mrp (Main Cabinet) : 11500/-

MRP

M : 5405 C-F (22")
C : Full White
S : 560 x 430 mm
B : 2217

Mrp(Full Set) : 13800/-
Mrp(Only Basin) : 2300/-
Mrp (Main Cabinet) : 11500/-

MRP

M : 5406 A-F (22")
C : White & Black
S : 560 x 430 mm
B : 2217

Mrp(Full Set) : 14000/-
Mrp(Only Basin) : 2300/-
Mrp (Main Cabinet) : 11700/-

MRP

M : 5406 B-F (22")
C : White & Brown
S : 560 x 430 mm
B : 2217

Mrp(Full Set) : 14000/-
Mrp(Only Basin) : 2300/-
Mrp (Main Cabinet) : 11700/-

MRP

M : 5407 A-F (22")
C : White & Cherry
S : 560 x 430 mm
B : 2217

Mrp(Full Set) : 13600/-
Mrp(Only Basin) : 2300/-
Mrp (Main Cabinet) : 11300/-

MRP

M : 5407 B-F (22")
C : White & Black
S : 560 x 430 mm
B : 2217

Mrp(Full Set) : 13600/-
Mrp(Only Basin) : 2300/-
Mrp (Main Cabinet) : 11300/-

MRP

M : 5408 A-F (22")
C : Full White
S : 560 x 430 mm
B : 2217

Mrp(Full Set) : 14100/-
Mrp(Only Basin) : 2300/-
Mrp (Main Cabinet) : 11800/-

MRP

M : 5408 B-F (22")
C : Full Ivory
S : 560 x 430 mm
B : 2217

Mrp(Full Set) : 14100/-
Mrp(Only Basin) : 2300/-
Mrp (Main Cabinet) : 11800/-

MRP

M : 5408 C-F (22")
C : White & Brown
S : 560 x 430 mm
B : 2217

Mrp(Full Set) : 14100/-
Mrp(Only Basin) : 2300/-
Mrp (Main Cabinet) : 11800/-

TOYO SANITARY WARES

560 mm (22")
Floor / Wall Mounted Series

PVC Bathroom Vanities

MRP

M : 5408 D-F (22")
C : Full Brown
S : 560 x 430 mm
B : 2217

Mrp(Full Set) : 14100/-
Mrp(Only Basin) : 2300/-
Mrp (Main Cabinet) : 11800/-

MRP

MI : 5408 E-F (22")
C : White & Red
S : 560 x 430 mm
B : 2217

Mrp(Full Set) : 14100/-
Mrp(Only Basin) : 2300/-
Mrp (Main Cabinet) : 11800/-

MRP

M : 5408 F-F (22")
C : Red & Black
S : 560 x 430 mm
B : 2217

Mrp(Full Set) : 14100/-
Mrp(Only Basin) : 2300/-
Mrp (Main Cabinet) : 11800/-

MRP

M : 5408 G-F (22")
C : White & Blue
S : 560 x 430 mm
B : 2217

Mrp(Full Set) : 14100/-
Mrp(Only Basin) : 2300/-
Mrp (Main Cabinet) : 11800/-

MRP

M : 5408 H-F (22")
C : White & Purple
S : 560 x 430 mm
B : 2217

Mrp(Full Set) : 14100/-
Mrp(Only Basin) : 2300/-
Mrp (Main Cabinet) : 11800/-

MRP

M : 5404 A-W (22")
C : White & Black
S : 560 x 430 mm
B : 2217

Mrp(Full Set) : 11900/-
Mrp(Only Basin) : 2300/-
Mrp (Main Cabinet) : 9600/-

MRP

M : 5404 B-W (22")
C : White & Red
S : 560 x 430 mm
B : 2217

Mrp(Full Set) : 11900/-
Mrp(Only Basin) : 2300/-
Mrp (Main Cabinet) : 9600/-

MRP

M : 5409 A-W (22")
C : White & Black
S : 560 x 430 mm
B : 2217

Mrp(Full Set) : 11900/-
Mrp(Only Basin) : 2300/-
Mrp (Main Cabinet) : 9600/-

MRP

M : 5409 B-W (22")
C : White Texture
S : 560 x 430 mm
B : 2217

Mrp(Full Set) : 11900/-
Mrp(Only Basin) : 2300/-
Mrp (Main Cabinet) : 9600/-

TOYO SANITARY WARES

500 mm (20")
Floor Mounted Series

PVC Bathroom Vanities

MRP

M : 5502-F (20")
C : White & Black
S : 500 x 400 mm
B : B-76

Mrp(Full Set) : 19400/-
Mrp(Only Basin) : 6000/-
Mrp (Main Cabinet) : 13400/-

MRP

M : 5512 A-F (20")
C : White & Black
S : 500 x 400 mm
B : B-76

Mrp(Full Set) : 19200/-
Mrp(Only Basin) : 6000/-
Mrp (Main Cabinet) : 13200/-

MRP

M : 5512 B-F (20")
C : Red & Black
S : 500 x 400 mm
B : B-76

Mrp(Full Set) : 19200/-
Mrp(Only Basin) : 6000/-
Mrp (Main Cabinet) : 13200/-

MRP

M : 5512 C-F (20")
C : White & L. Blue
S : 500 x 400 mm
B : B-76

Mrp(Full Set) : 19200/-
Mrp(Only Basin) : 6000/-
Mrp (Main Cabinet) : 13200/-

MRP

M : 5513 A-F (20")
C : White & Blue
S : 500 x 400 mm
B : B-76

Mrp(Full Set) : 19900/-
Mrp(Only Basin) : 6000/-
Mrp (Main Cabinet) : 13900/-

MRP

M : 5513 B-F (20")
C : Silver Texture
S : 500 x 400 mm
B : B-76

Mrp(Full Set) : 19900/-
Mrp(Only Basin) : 6000/-
Mrp (Main Cabinet) : 13900/-

MRP

M : 5514 A-F (20")
C : White & Brown
S : 500 x 400 mm
B : B-76

Mrp(Full Set) : 19900/-
Mrp(Only Basin) : 6000/-
Mrp (Main Cabinet) : 13900/-

MRP

M : 5514 B-F (20")
C : Red & Black
S : 500 x 400 mm
B : B-76

Mrp(Full Set) : 19900/-
Mrp(Only Basin) : 6000/-
Mrp (Main Cabinet) : 13900/-

MRP

M : 5514 C-F (20")
C : Blk. & Sil. Plain
S : 500 x 400 mm
B : B-76

Mrp(Full Set) : 19900/-
Mrp(Only Basin) : 6000/-
Mrp (Main Cabinet) : 13900/-

TOYO SANITARY WARES

500 mm (20") / 420 mm (16.5")
Floor Mounted Series

PVC Bathroom Vanities

MRP

M : 5515 -F (20")
C : Wooden Brown
S : 500 x 400 mm
B : B-76

Mrp(Full Set) : 20400/-
Mrp(Only Basin) : 6000/-
Mrp (Main Cabinet) : 14400/-

MRP

M : 5516 -F (20")
C : White & Brown
S : 500 x 400 mm
B : B-76

Mrp(Full Set) : 20000/-
Mrp(Only Basin) : 6000/-
Mrp (Main Cabinet) : 14000/-

MRP

M : 5615 A-F (16.5")
C : White & Black
S : 420 x 420 mm
B : 40-E-White

Mrp(Full Set) : 18800/-
Mrp(Only Basin) : 5600/-
Mrp (Main Cabinet) : 13200/-

MRP

M : 5615 B-F (16.5")
C : Ivory & Brown
S : 420 x 420 mm
B : 40-E-Ivory

Mrp(Full Set) : 18800/-
Mrp(Only Basin) : 5600/-
Mrp (Main Cabinet) : 13200/-

MRP

M : 5615 C-F (16.5")
C : Wooden Brown
S : 420 x 420 mm
B : 40-E-White

Mrp(Full Set) : 18800/-
Mrp(Only Basin) : 5600/-
Mrp (Main Cabinet) : 13200/-

MRP

M : 5615 D-F (16.5")
C : Full White
S : 420 x 420 mm
B : 40-E-White

Mrp(Full Set) : 18800/-
Mrp(Only Basin) : 5600/-
Mrp (Main Cabinet) : 13200/-

MRP

M : 5615 F-F (16.5")
C : Blk & Org. Onyx
S : 420 x 420 mm
B : 40-E-White

Mrp(Full Set) : 18800/-
Mrp(Only Basin) : 5600/-
Mrp (Main Cabinet) : 13200/-

MRP

M : 5601 A-F (16")
C : Full White
S : 400 x 400 mm

Mrp(Full Set) : 15860/-
Mrp(Only Basin) : 2260/-
Mrp (Main Cabinet) : 13600/-

MRP

M : 5601 C-F (16")
C : White & Brown
S : 400 x 400 mm

Mrp(Full Set) : 16200/-
Mrp(Only Basin) : 2600/-
Mrp (Main Cabinet) : 13600/-

TOYO SANITARY WARES

Corner
Floor Mounted Series

PVC
Bathroom Vanities

MRP

M : 5641 A-F (16")
C : Full White
S : 410 x 410 mm
B : 40-C- White

Mrp(Full Set) : 16200/-
Mrp(Only Basin) : 4200/-
Mrp (Main Cabinet) : 12000/-

MRP

M : 5641 B-F (16")
C : White & Black
S : 410 x 410 mm
B : 40-C- White

Mrp(Full Set) : 16200/-
Mrp(Only Basin) : 4200/-
Mrp (Main Cabinet) : 12000/-

MRP

M : 5641 C-F (16")
C : Full Brown
S : 410 x 410 mm
B : 40-C- White

Mrp(Full Set) : 16200/-
Mrp(Only Basin) : 4200/-
Mrp (Main Cabinet) : 12000/-

MRP

M : 5642 A-F (16")
C : Wh. & Blk. Mrbl
S : 410 x 410 mm
B : 40-C- White

Mrp(Full Set) : 16600/-
Mrp(Only Basin) : 4200/-
Mrp (Main Cabinet) : 12400/-

MRP

M : 5643 A-F (16")
C : Blu & Brocade Mrbl
S : 410 x 410 mm
B : 40-C- White

Mrp(Full Set) : 16600/-
Mrp(Only Basin) : 4200/-
Mrp (Main Cabinet) : 12400/-

MRP

M : 5644 A-F (16")
C : D. Grey & Cloudy
S : 410 x 410 mm
B : 40-C- White

Mrp(Full Set) : 16600/-
Mrp(Only Basin) : 4200/-
Mrp (Main Cabinet) : 12400/-

MRP

M : 5642 B-F (16")
C : Wh. & Blk. Mrble
S : 410 x 410 mm
B : 40-C-Black Mrble

Mrp(Full Set) : 20200/-
Mrp(Only Basin) : 7800/-
Mrp (Main Cabinet) : 12400/-

MRP

M : 5643 B-F (16")
C : Blue & Brocade Mrbl
S : 410 x 410 mm
B : 40-C- Brocade Mrble

Mrp(Full Set) : 20200/-
Mrp(Only Basin) : 7800/-
Mrp (Main Cabinet) : 12400/-

MRP

M : 5644 B-F (16")
C : D. Grey & Cloudy
S : 410 x 410 mm
B : 40-C-Grey Cloudy

Mrp(Full Set) : 20200/-
Mrp(Only Basin) : 7800/-
Mrp (Main Cabinet) : 12400/-

TOYO SANITARY WARES

500 mm (20") / 420 mm (16") / Corner
Wall Mounted Series

PVC Bathroom Vanities

MRP

M : 5514-W (20")
C : White & Black
S : 500 X 400 mm
B : B-76

Mrp(Full Set) : 17800/-
Mrp(Only Basin) : 6000/-
Mrp (Main Cabinet) : 11800/-

MRP

M : 5515-W (20")
C : Wooden Brown
S : 500 X 400 mm
B : B-76

Mrp(Full Set) : 18200/-
Mrp(Only Basin) : 6000/-
Mrp (Main Cabinet) : 12200/-

MRP

M : 5615 D-W (16.5")
C : Full White
S : 420 X 420 mm
B : 40-E-White

Mrp(Full Set) : 15600/-
Mrp(Only Basin) : 5600/-
Mrp (Main Cabinet) : 10000/-

MRP

M : 5615 A-W (16.5")
C : White & Black Mar
S : 420 x 420 mm
B : 40-E- White

Mrp(Full Set) : 15600/-
Mrp(Only Basin) : 5600/-
Mrp (Main Cabinet) : 10000/-

MRP

M : 5615 C-W (16.5")
C : Wooden Brown
S : 420 x 420 mm
B : 40-E- White

Mrp(Full Set) : 15600/-
Mrp(Only Basin) : 5600/-
Mrp (Main Cabinet) : 10000/-

MRP

M : 5615 E-W (16.5")
C : Wh. & Rose Gold
S : 420 x 420 mm
B : 40-E- White

Mrp(Full Set) : 15600/-
Mrp(Only Basin) : 5600/-
Mrp (Main Cabinet) : 10000/-

MRP

M : 5641 A-W (16")
C : Full White
S : 410 x 410 mm
B : 40-C-White

Mrp(Full Set) : 14200/-
Mrp(Only Basin) : 4200/-
Mrp (Main Cabinet) : 10000/-

MRP

M : 5641 B-W (16")
C : White & Black
S : 410 x 410 mm
B : 40-C-White

Mrp(Full Set) : 14200/-
Mrp(Only Basin) : 4200/-
Mrp (Main Cabinet) : 10000/-

MRP

M : 5641 C-W (16")
C : Full Brown
S : 410 x 410 mm
B : 40-C-White

Mrp(Full Set) : 14200/-
Mrp(Only Basin) : 4200/-
Mrp (Main Cabinet) : 10000/-

MRP

Model : 5280 - F (32")
Size : 810 X 470 mm
Color : Wooden Finish

Full Set	: 46000/-
Mrp (Mirror)	: 2800/-
Mrp (Side Cabinet)	: 8200/-
Mrp (Only Basin)	: 6000/-
Mrp (Main Cabinet)	: 29000/-

MRP

Model : 5281 - F (32")
Size : 810 X 470 mm
Color : Black

Full Set	: 46000/-
Mrp (Mirror)	: 2800/-
Mrp (Side Cabinet)	: 8200/-
Mrp (Only Basin)	: 6000/-
Mrp (Main Cabinet)	: 29000/-

MRP

Model : 5298 - F (32")
Size : 810 X 470 mm
Color : Black & White

Full Set	: 46000/-
Mrp (Mirror)	: 2800/-
Mrp (Side Cabinet)	: 8200/-
Mrp (Only Basin)	: 6000/-
Mrp (Main Cabinet)	: 29000/-

Full Set	: 28000/-
Mrp (Mirror)	: 2400/-
Mrp (Shelf)	: 1600/-
Mrp (Only Basin)	: 5000/-
Mrp (Main Cabinet)	: 19000/-

Model : 5559-F (21")
Size : 520 X450 mm
Color : Wooden Finish

Full Set	: 27000/-
Mrp (Mirror)	: 2400/-
Mrp (Shelf)	: 1600/-
Mrp (Only Basin)	: 5000/-
Mrp (Main Cabinet)	: 18000/-

Model : 5659-F (16.5")
Size : 420X420 mm
Color : Wooden Finish

Full Set	: 23000/-
Mrp (Mirror)	: 2400/-
Mrp (Shelf)	: 1400/-
Mrp (Only Basin)	: 4600/-
Mrp (Main Cabinet)	: 14600/-

Model : 5553 -W (16")
Size : 400 X 400 mm
Color : As Picture

Full Set	: 23000/-
Mrp (Mirror)	: 2400/-
Mrp (Shelf)	: 1400/-
Mrp (Only Basin)	: 4600/-
Mrp (Main Cabinet)	: 14600/-

Model : 5660 -W (16")
Size : 400 X 400 mm
Color : As Picture

Model : 40-E (16.5")
Size : 420 x 420 mm
Color : White / Ivory

MRP : 5600/-

Model : 60-E (24")
Size : 610 x 465 mm
Color : White
MRP : 4600/-

Model : 80-E (32")
Size : 810 x 470 mm
Color : White
MRP : 6900/-

New

Model : H -6050 (24") Size : 600 X 500 mm — Mrp (24") : 6000/-
Model : H -8050 (32") Size : 800 X 500 mm — Mrp (32") : 7800/-
Model : H -10050 (40") Size : 1000 X 500 mm — Mrp (40") : 12000/-
Color : White

Model : B-76 (20")
Size : 500 X 400 mm
Color : White / Ivory

MRP : 6000/-

Model : G-10045 (40") Size : 1000 X 470mm — Mrp (40") : 11000/-
Model : G-8045 (32") Size : 810 X 470 mm — Mrp (32") : 6900/-
Model : G-7045 (28") Size : 710 X 470 mm — Mrp (28") : 6900/-
Model : G-6045 (24") Size : 610 X 460 mm — Mrp (24") : 4600/-
Color : White

Model : G-6040 (24") Size : 605 X 405 mm — Mrp (24") : 4600/-
Model : G-5035 (20") Size : 505 X 360 m — Mrp (20") : 4200/-
Color : White

Without Tap Hole

Model : G-8045-1 (32")
Size : 810 X 470 mm
Color : White
MRP : 6900/-

Model : G-6045-1 (24")
Size : 610 X 460 mm
Color : White
MRP : 4600/-

Model : 2217 (22")
Size : 560 X 430 mm
Color : White / Ivory

Mrp (22") : 2300/-

MRP : 9200/-

Model : T-80 (32")
Size : 810 x 390 mm
Color : White

MRP : 9000/-

Model : T-70 (28")
Size : 710 x 390 mm
Color : White

MRP : 7300/-

Model : T-60 (24")
Size : 610 x 390 mm
Color : White

Model : SE-8006 (32")
Size : 810 x 480 mm
Color : White

MRP : 9600/-

Model : SE-6006 (24")
Size : 605 x 475 mm
Color : White

MRP : 7800/-

Model : G-60 -White Marble
Size : 610 X 460 mm (24")
Color : White Marble

MRP : 9600/-

G-60 (24")

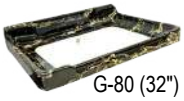

G-80 (32")

Model : G-60 (24")
Size : 610 X 460 mm
Color : Full Black Marble

MRP : 9600/-

Model : G-80 (32")
Size : 810 X 470 mm
Color : Black Marble

MRP : 12400/-

Model : G-60 -Grey Cloudy
Size : 610 X 460 mm (24")
Color : Grey Cloudy

MRP : 9600/-

Model : G-60 -Brocade Marble
Size : 610 X 460 mm (24")
Color : Brocade Marble

MRP : 9600/-

Model : G-60-Wooden Brown
Size : 610 X 460 mm (24")
Color : Wooden Brown

MRP : 9600/-

Model : G-60-Golden
Size : 610 X 460 mm (24")
Color : White & Golden

MRP : 9600/-

Model : CB-1001 (40") Size : 1000 X 500 mm
Model : CB-801 (32") Size : 810 X 500 mm
Color : Creamy Silver Marble

MRP(40") : 20000/-
MRP(32") : 15000/-

Model : CB-1002 (40") Size : 1000 X 500 mm
Model : CB-802 (32") Size : 810 X 500 mm
Color : Browny Marble

MRP(40") : 20000/-
MRP(32") : 15000/-

Model : CB-1003 (40") Size : 1000 X 500 mm
Model : CB-803 (32") Size : 810 X 500 mm
Color : Silver Grey Marble

MRP(40") : 20000/-
MRP(32") : 15000/-

Model : CB-1004 (40") Size : 1000 X 500 mm
Model : CB-804 (32") Size : 810 X 500 mm
Color : Black Marble

MRP(40") : 20000/-
MRP(32") : 15000/-

Model : 40C-White
Size : 410 x 410 mm (16")
Color : White

MRP : 4200/-

Model : 40C-White Marble
Size : 410 x 410 mm (16")
Color : White Marble

MRP : 7800/-

Model : 40C-Black Marble
Size : 410 x 410 mm (16")
Color : Black Marble

MRP : 7800/-

Model : 40C-Grey Cloudy
Size : 410 x 410 mm (16")
Color : Grey Cloudy

MRP : 7800/-

Model : 40C-Brocade Marble
Size : 410 x 410 mm (16")
Color : Brocade Marble

MRP : 7800/-

Model : 40C-Wooden Brown
Size : 410 x 410 mm (16")
Color : Wooden Brown

MRP : 7800/-

Cut Marble Top-24"

Semi Under Counter Basin
Model : SUC-24S
390 x 390 mm

Model : 011-WM
Size : 600 x 480 mm (24")
Color : White Marble

MRP (Marble Top) : 6400/-
MRP (Basin) : 5500/-

"012-WM"
2 Hole
Marble Top
24"

"013-WM"
Single Hole
Marble Top
24"

MRP : 6400/-

Model : 012-WM Size : 600 x 470 mm Color : White Marble	Model : 013-WM Size : 600 x 470 mm Color : White Marble

Cut Marble Top-32"

Semi Under Counter Basin
Model : SUC-32
590 x 415 mm

Model : 021-WM
Size : 800 x 490 mm (32")
Color : White Marble

MRP (Marble Top) : 8700/-
MRP (Basin) : 6600/-

"022-WM"
2 Hole
Marble Top
32"

"023-WM"
Single Hole
Marble Top
32"

MRP : 8700/-

Model : 022-WM Size : 800 x 490 mm Color : White Marble	Model : 023-WM Size : 800 x 490 mm Color : White Marble

Cut Marble Top-40"

Semi Under Counter Basin
Model : SUC-40
595 x 410 mm

Model : 031-WM
Size : 1000 x 500 mm (40")
Color : White Marble

MRP (Marble Top) : 10400/-
MRP (Basin) : 6400/-

"032-WM"
2 Hole
Marble
Top
40"

"033-WM"
Single Hole
Marble Top-40"

MRP : 10400/-

Model : 032-WM Size : 1000 x 490 mm Color : White Marble	Model : 033-WM Size : 1000 x 490 mm Color : White Marble

Cut Marble Top-24"

MRP : 6400/-

Model : 011-BM
Size : 600 x 480 mm (24")
Color : Black Marble

2 Hole Marble Top-24"

MRP : 6400/-

Model : 012-BM
Size : 600 x 480 mm (24")
Color : Black Marble

Single Hole Marble Top-24"

MRP : 6400/-

Model : 013-BM
Size : 600 x 480 mm (24")
Color : Black Marble

Cut Marble Top-32"

MRP : 8700/-

Model : 021-BM
Size : 800 x 490 mm (32")
Color : Black Marble

2 Hole Marble Top-32"

MRP : 8700/-

Model : 022-BM
Size : 800 x 490 mm (32")
Color : Black Marble

Single Hole Marble Top-32"

MRP : 8700/-

Model : 023-BM
Size : 800 x 490 mm (32")
Color : Black Marble

Cut Marble Top-40"

MRP : 10400/-

Model : 031-BM
Size : 1000 x 500 mm (40")
Color : Black Marble

2 Hole Marble Top-40"

MRP : 10400/-

Model : 032-BM
Size : 1000 x 490 mm (40")
Color : Black Marble

Single Hole Marble Top-40"

MRP : 10400/-

Model : 033-BM
Size : 1000 x 490 mm (40")
Color : Black Marble

Cut Marble Top-24"

MRP : 5100/-

Model : 011-GM
Size : 600 x 480 mm (24")
Color : Grey Marble

Cut Marble Top-32"

MRP : 7800/-

Model : 021-GM
Size : 800 x 490 mm (32")
Color : Grey Marble

TOYO
SANITARY WARES

Black Sanitary Wares

Black Passion - When choosing Bathroom Healthcare, this Dark tone can be the Best Solution. A Perfect Blend of Modern & Classic is all set to take your Bathroom to next level.

2D Rimless Syphonic

DISCONTINUED

Model No : 21021-Black
Size (hxwxp) : 740 x 370 x 650 mm
Color · Black Glossy
· Black Matt
S-Trap Dist : 300 mm (12")
Features · Hydrolic Seat Cover
· Dual Flush
· 2D Rimless Syphonic

MRP
With PP Seat Cover : ₹ 20400/-
With UF Seat Cover : ₹ 23400/-

Model No : 21033-Black
Size (hxwxp) : 730 x 330 x 670 mm
Color · Black Glossy
· Black Matt
S-Trap Dist : 225 mm (9") / P-Trap
Features · Hydrolic Seat Cover
· Dual Flush
· Wash Down

Black Glossy

MRP
With PP Seat Cover : ₹ 20400/-
With UF Seat Cover : ₹ 23400/-

Black Matt

MRP
With PP Seat Cover : ₹ 22200/-
With UF Seat Cover : ₹ 25200/-

2D Rimless Syphonic

DISCONTINUED

Model No : 21034-Black
Size (hxwxp) : 730 x 330 x 670 mm
Color · Black Glossy
· Black Matt
S-Trap Dist : 300 mm (12")
Features · Hydrolic Seat Cover
· Dual Flush
· 2D Rimless Syphonic

MRP
With PP Seat Cover : ₹ 20400/-
With UF Seat Cover : ₹ 23400/-

Model No : 21032-Black
Size (hxwxp) · 715 x 350 x 675 mm
Color · Black Glossy
· Black Matt
S-Trap Dist · 300 mm (12")
· 225 mm (9")
Features : Hydrolic Seat Cover
Dual Flush

Black Glossy

MRP
₹ 18600/-

Black Matt

MRP
₹ 20400/-

Model No : 22011-Black
Size : 510 x 360 x 350 mm
Color · Black Glossy
· Black Matt
Features : Hydrolic Seat Cover

Black Glossy

MRP
With PP Seat Cover : ₹ 13600/-
With UF Seat Cover : ₹ 16600/-

Black Matt

MRP
With PP Seat Cover : ₹ 14600/-
With UF Seat Cover : ₹ 17600/-

Model No : 22012-Black
Size : 490 x 350 x 350 mm
Color · Black Glossy
· Black Matt
Features : Hydrolic Seat Cover

Black Glossy

MRP
With PP Seat Cover : ₹ 13600/-
With UF Seat Cover : ₹ 16600/-

Black Matt

MRP
With PP Seat Cover : ₹ 14600/-
With UF Seat Cover : ₹ 17600/-

Model No : 22013-Black
Size : 520 x 350 x 340 mm
Color · Black Glossy
· Black Matt
Features : Hydrolic Seat Cover

Black Glossy

MRP
With PP Seat Cover : ₹ 13600/-
With UF Seat Cover : ₹ 16600/-

Black Matt

MRP
With PP Seat Cover : ₹ 14600/-
With UF Seat Cover : ₹ 17600/-

2 Hole
Rimless Flushing

Model No : 22014-Black
Size : 510 x 340 x 340 mm
Color · Black Glossy
· Black Matt
Features : Hydrolic Seat Cover

Black Glossy

MRP
With PP Seat Cover : ₹ 13600/-
With UF Seat Cover : ₹ 16600/-

Black Matt

MRP
With PP Seat Cover : ₹ 14600/-
With UF Seat Cover : ₹ 17600/-

MRP

Model : 24031-Black Size : 620 x 410 x 110 mm Color : Black Matt / Black Glossy	Black Glossy : ₹ 6400/- Black Matt : ₹ 7300/-

MRP

Model : 24033-Black Size : 490 x 380 x 140 mm Color : Black Matt / Black Glossy	Black Glossy : ₹ 5500/- Black Matt : ₹ 6400/-

MRP

Model : 24035-Black Size : 410 x 410 x 120 mm Color : Black Matt / Black Glossy	Black Glossy : ₹ 5500/- Black Matt : ₹ 6400/-

MRP

Model : 24036-Black Size : 420 x 350 x 170 mm Color : Black Matt / Black Glossy	Black Glossy : ₹ 4330/- Black Matt : ₹ 5230/-

MRP

Model : 24038-Black Size : 440 x 380 x 130 mm Color : Black Matt / Black Glossy	Black Glossy : ₹ 5500/- Black Matt : ₹ 6400/-

MRP

Model : 24039-Black Size : 485 x 375 x 135 mm Color : Black Matt / Black Glossy	Black Glossy : ₹ 5500/- Black Matt : ₹ 6400/-

MRP

Model : 24040-Black Size : 425 x 425 x 115 mm Color : Black Matt / Black Glossy	Black Glossy : ₹ 5500/- Black Matt : ₹ 6400/-

MRP

Model : 24041-Black Size : 530 x 340 x 120 mm Color : Black Matt / Black Glossy	Black Glossy : ₹ 5500/- Black Matt : ₹ 6400/-

Salon Basin

MRP

Model : 24051-Black Size : 600 x 510 x 210 mm Color : Black Glossy	Black Glossy : ₹ 6400/-

Salon Basin

MRP

Model : 24052-Black Size : 530 x 560 x 250 mm Color : Black Glossy	Black Glossy : ₹ 6400/-

Black Matt / Black Glossy

Model No : 25014-Black
Size : 600 x 490 x 860 mm
Color : Black Glossy / Black Matt

Black Glossy MRP	Black Matt MRP
Full Set : ₹ 9200/-	Full Set : ₹ 10100/-
Basin : ₹ 4600/-	Basin : ₹ 5050/-
Pedestal : ₹ 4600/-	Pedestal : ₹ 5050/-

Black Matt / Black Glossy

Model No : 25015-Black
Size : 560 x 460 x 860 mm
Color : Black Glossy / Black Matt

Black Glossy MRP	Black Matt MRP
Full Set : ₹ 7800/-	Full Set : ₹ 8700/-
Basin : ₹ 3900/-	Basin : ₹ 4350/-
Pedestal : ₹ 3900/-	Pedestal : ₹ 4350/-

Black Matt / Black Glossy

Model No : 25016-Black
Size : 530 x 430 x 870 mm
Color : Black Glossy / Black Matt

Black Glossy MRP	Black Matt MRP
Full Set : ₹ 6400/-	Full Set : ₹ 7300/-
Basin : ₹ 3200/-	Basin : ₹ 3650/-
Pedestal : ₹ 3200/-	Pedestal : ₹ 3650/-

Black Matt / Black Glossy

Model No : 25017-Black
Size : 600 x 480 x 870 mm
Color : Black Glossy / Black Matt

Black Glossy MRP	Black Matt MRP
Full Set : ₹ 8300/-	Full Set : ₹ 9200/-
Basin : ₹ 4150/-	Basin : ₹ 4600/-
Pedestal : ₹ 4150/-	Pedestal : ₹ 4600/-

Black Matt / Black Glossy

Model No : 25021-Black
Size : 430 x 430 x 850 mm
Color : Black Glossy / Black Matt

MRP
Black Glossy : ₹ 14500/-
Black Matt : ₹ 16500/-

Black Matt / Black Glossy

Model No : 28001-Black
Size : 550 x 460 x 370 mm
Color : Black Glossy / Black Matt

MRP
Black Glossy : ₹ 10500/-
Black Matt : ₹ 11400/-

Black Matt / Black Glossy

Model No : **27011-Black**
Size : 520 x 300 x 340 mm
Color : Black Glossy / Black Matt

MRP
Black Glossy : ₹ 5500/-
Black Matt : ₹ 6400/-

Black Glossy

Model No : **26002-Black**
Size : 580 x 435 mm (23")
Color : Black Glossy

MRP:₹ 3700/-

CLEANING	
Warm water cleaning	It can wash rear with filtered, clean and warm water all directionally. And it can clean out mineral dirt from anus and avoid reproduction bacteria
Feminine wash	A separate and dedicated stream of water cleans the vaginal area safely and comfortably.
Water strengh adjusting	The washing water strengh of the nozzle can be adjust strong or weak.
swing wash	The nozzle can move forward or backward to adjust the washing area.
Massage Rinse	The water strengh of the nozzle can adjust to strong or weak,can make a massage rinse effect.

SOFT FEATURES	
Toilet seat warming	The toilet seat can warm up or keep warming.
warm wind drying	The wet part can be dry by the warm wind of the intelligent toilet.
Temperature adjusting	The temperature of the washing water, toilet seat and drying wind can be adjusted.
Soft lighting	There is a feature of soft and blue light in the toilet.
Remote control	The romote control is consider to be the most convenience and humane
Toilet seat sensor	The toilet seat sensor will work when you sit on the toilet seat. Then, you can use other features.
auto opening or closing	The toilet cover can open or close automatically
Warm water washing by remote control	The warm water washing feature can be use by remote control
Auto flushing	The toilet will flushing automatically after you leave.

SEAT FEATURES	
Antibacterial feature	Toilet seat, switches and other parts in direct contact with the skin were antibacterial treatment. And the toilet is also antibacterial too.
Nozzle auto cleaning	The nozzle can clean it self by water.
Auto flushing	Toilets will be cleaned automatically by continuous cycle automatic washing water
Intelligent Clean Type Toilet	Intelligent cleaning technology, can make the dirt is difficult to attach, it will more easy to clean the toilet.

POWER SAVING FEATURE	
Power saving	When the power saving feature is set, the toilet seat will stop warming up to save power
POWER ON/ OFF switch	If you turn the switch OFF, all of the features will stop work for saving power

Model : 21006
Color : White & Golden

MRP: ₹ 190000/-

Model : 21006
Color : White & Black

MRP ₹ 190000/-

MRP : ₹ 39700/-

Model : 21011-White
Size : 680 x 400 x 620 mm
S-Trap : 300 mm

Features
- UF Soft Close Seat Cover
- Aesthetic Innovative Design

MRP : ₹ 60400/-

Model : 21011-Black Matt
Size : 680 x 400 x 620 mm
S-Trap : 300 mm

Features
- UF Soft Close Seat Cover
- Aesthetic Innovative Design

Model : 21031, Washdown One -Piece Closet
Size : 680 x 350 x 790 mm, S-Trap- 300 mm

MRP
₹ 35200/-

Model : 22031, Wall - Hung Closet With Cistern
Size : 660 x 350 x 710 mm

MRP
₹ 22600/-

		MRP
Model	: 21014 - White	With PP Seat Cover : ₹ 13600/-
Size	: 760 x 360 x 670 mm	With UF Seat Cover : ₹ 15800/-
S-Trap Dist	: 225mm(9")/100mm(4")	
Features	: Hydraulic Seat Cover / Dual Flush	

		MRP
Model	: 21014-A - White	With PP Seat Cover : ₹ 15100/-
Size	: 760 x 360 x 670 mm	With UF Seat Cover : ₹ 17300/-
S-Trap Dist	: 225mm(9")/100mm(4")	
Features	: Hydraulic Seat Cover / Dual Flush / Inbuilt Jet	

		MRP
Model	: 21015 - White	With PP Seat Cover : ₹ 11200/-
Size	: 700 x 380 x 690 mm	With UF Seat Cover : ₹ 13400/-
S-Trap Dist	: 225mm(9") / 100mm (4") / P-Trap	
Features	: Hydraulic Seat Cover / Dual Flush	

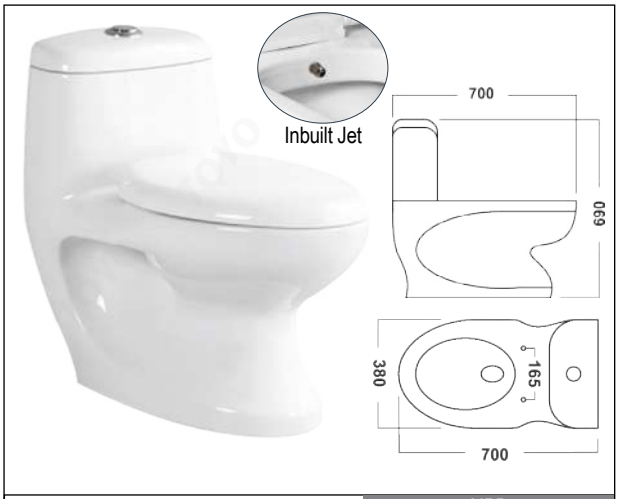

		MRP
Model	: 21015-A - White	With PP Seat Cover : ₹ 12700/-
Size	: 700 x 380 x 690 mm	With UF Seat Cover : ₹ 14900/-
S-Trap Dist	: 225mm(9") /100mm(4") / P-Trap	
Features	: Hydraulic Seat Cover / Dual Flush / Inbuilt Jet	

		MRP
Model	: 21020 - White	With PP Seat Cover : ₹ 11400/-
Size	: 710 x 380 x 690 mm	With UF Seat Cover : ₹ 13600/-
S-Trap Dist	: 225 mm (9")	
Features	: Hydraulic Seat Cover / Dual Flush	

		MRP
Model	: 21022 - White	With PP Seat Cover : ₹ 15600/-
Size	: 740 x 390 x 680 mm	With UF Seat Cover : ₹ 17800/-
S-Trap Dist	: 225mm(9")/ P-Trap	
Features	: Hydraulic Seat Cover / Dual Flush	

New Model : 21046 - White

Model : 21021 - White	MRP
Size : 740 x 370 x 650 mm	With PP Seat Cover : ₹ 15400/-
S-Trap Dist : 300 mm (12") / 220mm (9")	With UF Seat Cover : ₹ 17600/-
Features : Syphonic Rimless Flushing / Hydraulic Thin Seat Cover / Dual Flush	

Model : 21022-A - White	MRP
Size : 740 x 390 x 680 mm	With PP Seat Cover : ₹ 17100/-
S-Trap Dist : 225mm (9") / P-Trap	With UF Seat Cover : ₹ 19300/-
Features : Hydraulic Seat Cover / Dual Flush / Inbuilt Jet	

Model : 21032 - White	MRP
Size : 715 x 350 x 675 mm	With PP Seat Cover : ₹ 14200/-
S-Trap Dist : 225mm(9")/300mm(12")/ P-Trap	
Features : Hydraulic Seat Cover / Dual Flush	

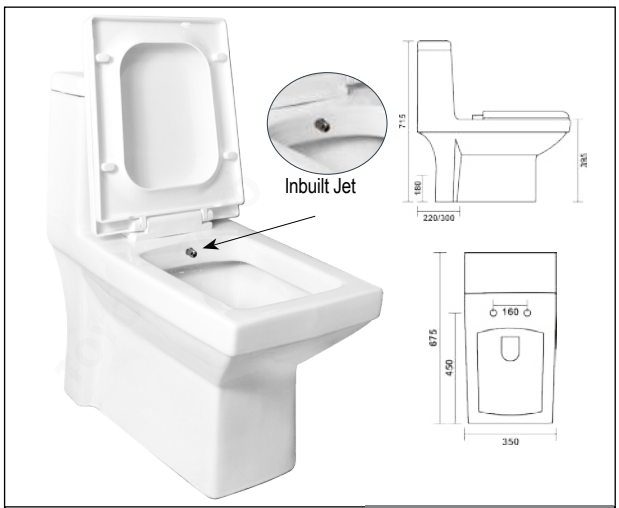

Model : 21032-A - White	MRP
Size : 715 x 350 x 675 mm	With PP Seat Cover : ₹ 15700/-
S-Trap Dist : 225mm(9")/300mm(12")/P-Trap	
Features : Hydraulic Seat Cover / Dual Flush	

Model : 21033 - White	MRP
Size : 730 x 330 x 670 mm	With PP Seat Cover : ₹ 14200/-
S-Trap Dist : 225mm(9") / P-Trap	With UF Seat Cover : ₹ 16400/-
Features : Hydraulic Seat Cover / Dual Flush	

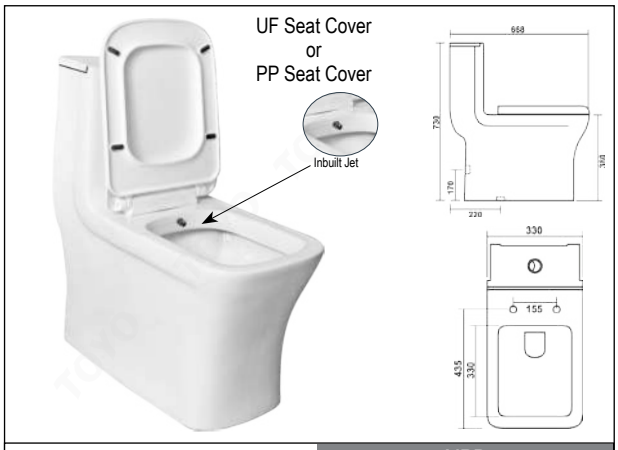

Model : 21033-A - White	MRP
Size : 730 x 330 x 670 mm	With PP Seat Cover : ₹ 15700/-
S-Trap Dist : 225mm(9") P-Trap	With UF Seat Cover : ₹ 17900/-
Features : Hydraulic Seat Cover / Dual Flush / Inbuilt Jet	

Syphonic
2-D Swriling Flushing

UF Seat Cover
or
PP Seat Cover

Model : 21034 - White	MRP
Size : 730 x 330 x 670 mm	With PP Seat Cover : ₹ 15900/-
S-Trap Dist : 300 mm (12")	With UF Seat Cover : ₹ 18100/-
Features : Syphonic Rimless Flushing / Hydraulic Thin Seat Cover / Dual Flush	

Model : 21035 - White	MRP
Size : 760 x 690 x 360 mm	With PP Seat Cover : ₹ 14200/-
S-Trap Dist : 225mm (9") / P-Trap	With UF Seat Cover : ₹ 16400/-
Features : Hydraulic Seat Cover / Dual Flush	

Model : 21036 - White	MRP
Size : 715 x 360 x 670 mm	With PP Seat Cover : ₹ 12400/-
S-Trap Dist : 225mm (9")	With UF Seat Cover : ₹ 14600/-
Features : Hydraulic Seat Cover / Dual Flush	

Model : 21036-A - White	MRP
Size : 715 x 360 x 670 mm	With PP Seat Cover : ₹ 13900/-
S-Trap Dist : 225mm (9")	With UF Seat Cover : ₹ 16100/-
Features : Hydraulic Seat Cover / Dual Flush / Inbuilt Jet	

Model : 21037 - White Size : 740 x 355 x 640 mm S-Trap Dist : 225 mm (9") Syphonic Rimless Flushing / Hydraulic Seat Cover / Dual Flush	MRP With PP Seat Cover : ₹ 15400/-

Model : 21038 - White Size : 730 x 350 x 655 mm S-Trap Dist : 4" / 9" / 12" Features : Hydraulic Seat Cover / Dual Flush	MRP With PP Seat Cover : ₹ 15400/- With UF Seat Cover : ₹ 17600/-

Model : 21038-A - White Size : 730 x 355 x 655 mm S-Trap Dist : 4" / 9" / 12" Features : Hydraulic Seat Cover / Dual Flush / Inbuilt Jet	MRP With PP Seat Cover : ₹ 16900/- With UF Seat Cover : ₹ 19100/-

Model : 21039 - White Size : 740 x 650 x 360 mm S-Trap Dist : 225 mm (9") Features : Hydraulic Seat Cover / Dual Flush / 4D Syphonic Rimless Flushing	MRP With PP Seat Cover : ₹ 15400/- With UF Seat Cover : ₹ 17600/-

Model : 21040 - White Size : 750 x 650 x 360 mm S-Trap Dist : 225mm (9") / P-Trap Features : Hydraulic Seat Cover / Dual Flush	MRP With PP Seat Cover : ₹ 13600/-

Model : 21051 - White Size : 520 x 280 x 500 mm S-Trap Dist : 150 mm (6") Features : Hydraulic Seat Cover / Dual Flush	MRP ₹ 12200/-

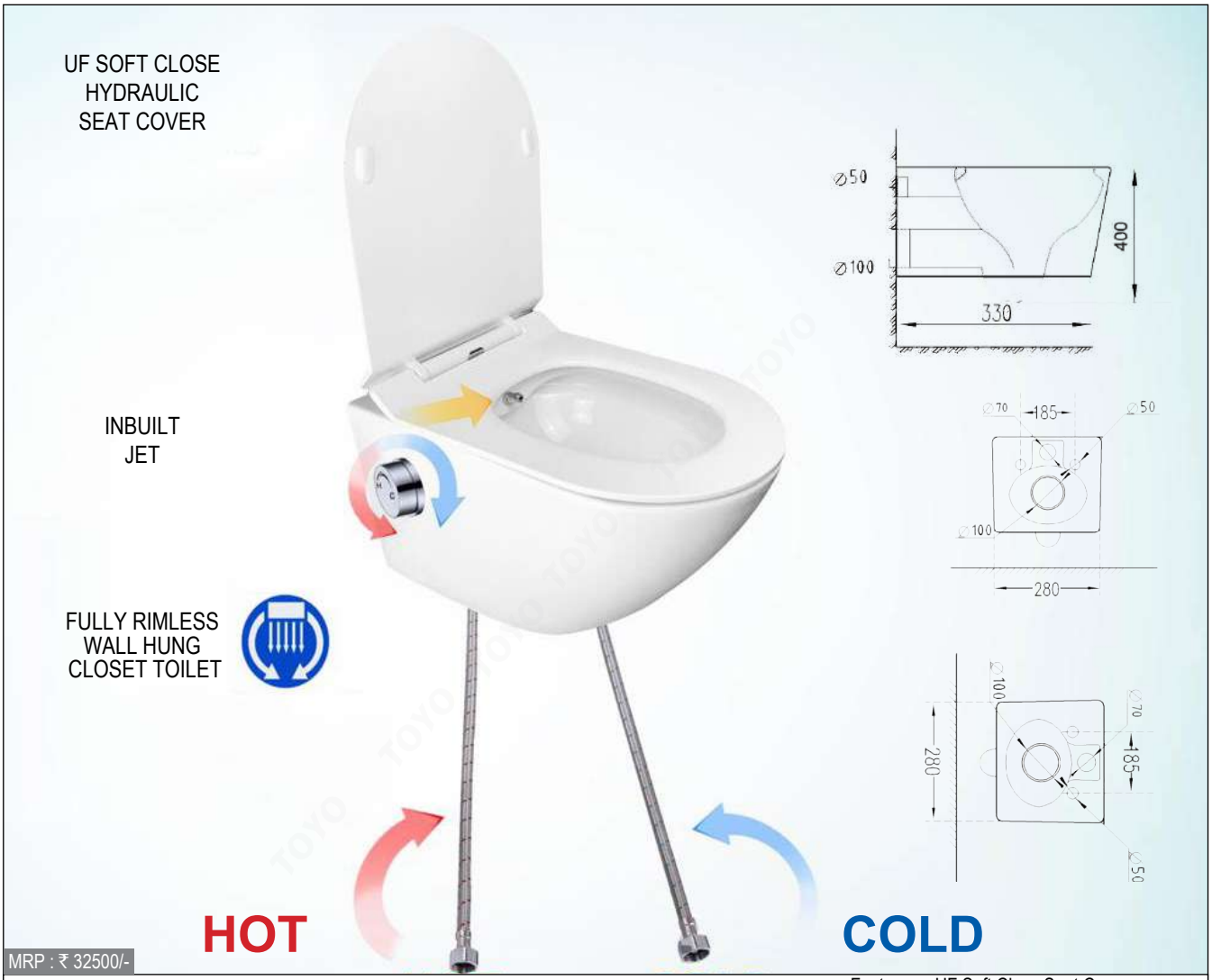

MRP : ₹ 32500/-

Model : 22022-Jet
Size : 485 x 365 x 365 mm

Features
- UF Soft Close Seat Cover
- Fully Rimless
- Aesthetic Innovative Design
- Inbuilt Jet with Hot & Cold Mixer

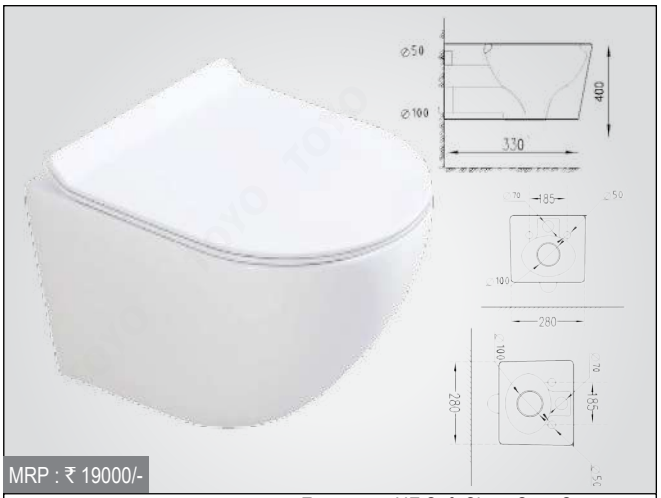

MRP : ₹ 19000/-

Model : 22022, Wall - Hung Closet
Size : 485 x 365 x 365 mm

Features
- UF Soft Close Seat Cover
- Fully Rimless
- Aesthetic Innovative Design

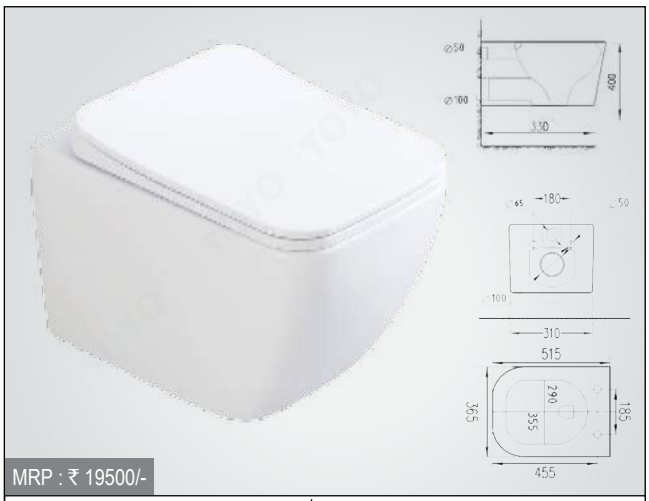

MRP : ₹ 19500/-

Model : 22023, Wall - Hung Closet
Size : 515 x 350 x 365 mm

Features
- UF Soft Close Seat Cover
- Fully Rimless
- Aesthetic Innovative Design

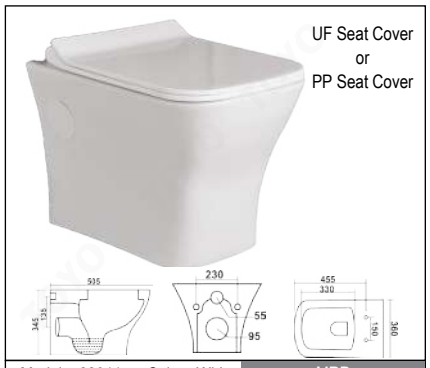

Model : 22011 Color : White
Size : 505 x 360 x 345 mm
P-Trap / Hydraulic Seat Cover

MRP
With PP SC : ₹ 9100/-
With UF SC : ₹ 11300/-

Model : 22012 Color : White
Size : 485 x 345 x 310 mm
P-Trap / Hydraulic Seat Cover

MRP
With PP SC : ₹ 9100/-
With UF SC : ₹ 11300/-

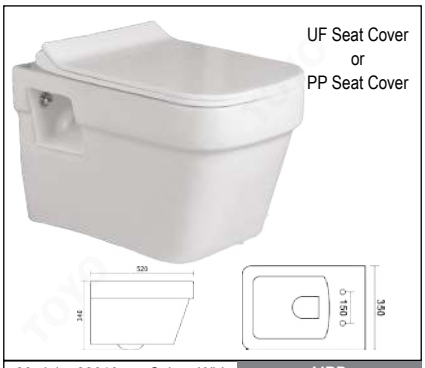

Model : 22013 Color : White
Size : 520 x 350 x 340 mm
P-Trap / Hydraulic Seat Cover

MRP
With PP SC : ₹ 9100/-
With UF SC : ₹ 11300/-

Model : 22013 -A Color : White
Size : 520 x 350 x 340 mm
P-Trap / Hydraulic SC / Inbuilt Jet

MRP
With PP SC : ₹ 10600/-
With UF SC : ₹ 12800/-

Model : 22014 Color : White
Size : 505 x 345 x 340 mm
P-Trap / Hydraulic Seat Cover

MRP
With PP SC : ₹ 8290/-
With UF SC : ₹ 10490/-

Model : 22015 Color : White
Size : 515 x 350 x 370 mm
P-Trap / Hydraulic Seat Cover

MRP
With PP SC : ₹ 8290/-

Model : 22015-A Color : White
Size : 515 X 350 X 370 mm
P-Trap / Hydraulic Seat Cover / Inbuilt Jet

MRP
With PP SC : ₹ 9790/-

Model : 22016 Color : White
Size : 510 x 350 x 365 mm
P-Trap / Hydraulic Seat Cover/Inbuilt Jet

MRP
With PP SC : ₹7400/-
With UF SC : ₹ 9600/-

Model : 22016-A Color : White
Size : 510 x 350 x 365 mm
P-Trap / Hydraulic Seat Cover

MRP
With PP SC : ₹ 8900/-
With UF SC : ₹ 11100/-

Model : 22017 Color : White
Size : 500 x 350 x 360 mm
P-Trap / Hydraulic Seat Cover

MRP
With PP SC : ₹ 8200/-
With UF SC : ₹ 10400/-

Model : 22018 Color : White
Size : 490 x 360 x 390 mm
P-Trap / Hydraulic Seat Cover

MRP
₹ 5860/-

Model : 22018-A Color : White
Size : 490 x 360 x 390 mm
P-Trap / Hydraulic Seat Cover / Inbuilt Jet

MRP
₹ 7360/-

S-Trap EWC

Model: 23011-S
Color : White
Size : 460 x 330 x 420 mm

MRP (EWC) : ₹ 2300/-
MRP (Hydraulic SC) : ₹ 1050/-
MRP (Normal SC) : ₹ 730/-

P-Trap EWC

Model : 23011-P
Color : White
Size : 460 x 330 x 420 mm

MRP (EWC) : ₹ 2300/-
MRP (Hydraulic SC) : ₹ 1050/-
MRP (Normal SC) : ₹ 730/-

S-Trap Anglo Indian EWC

Model : 23012-S
Color : White
Size : 540 x 460 x 410 mm

MRP (EWC) : ₹ 4200/-
MRP (Normal SC) : ₹ 1050/-

P-Trap Anglo Indian EWC

Model : 23012-P
Color : White
Size : 540 x 460 x 410 mm

MRP (EWC) : ₹ 4200/-
MRP (Normal SC) : ₹ 1050/-

Concealed EWC / S-Trap

Model : 23013
Color : White
Size : 550 x 360 x 390 mm

MRP (EWC) : ₹ 3160/-
MRP (Hydraulic SC) : ₹ 1050/-
MRP (Normal SC) : ₹ 730/-

Square EWC

Model : 23014 Sq. EWC
Color : White
Size : 520 x 240 x 390 mm

MRP ₹ 4420/-

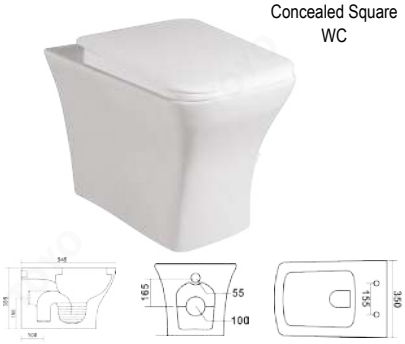

Concealed Square WC

Model : 23015 Color : White
Size : 545 x 350 x 395 mm
S-Trap / P-Trap / Hydraulic SC

MRP ₹ 9100/-

Model : 26001-20"-Orissa Pan
Color : White

MRP ₹ 1550/-

Model : 26002-23"-Orissa Pan
Color : White

MRP ₹ 1950/-

Model : 26003-20"-City Pan
Color : White

MRP ₹ 1550/-

Model : 26004-20"-Aqua Pan
Color : White

MRP ₹ 1720/-

S-Trap Siphon

P-Trap Siphon

Model : 26011-S Trap
Model : 26012-P Trap

MRP ₹ 1200/- (for 4 pcs)

Model : 24021
Color : White
Size : 460 x 350 x 150 mm
MRP ₹ 1650/-

Model : 24022
Color : White
Size : 420 x 420 x 140 mm
MRP ₹ 1950/-

Model : 24023
Color : White
Size : 400 x 350 x 145 mm
MRP ₹ 1500/-

Model : 24024
Color : White
Size : 420 x 340 x 140 mm
MRP ₹ 1450/-

Model : 24025
Color : White
Size : 440 x 350 x 180 mm
MRP ₹ 1090/-

Model : 24026
Color : White
Size : 470 x 350 x 180 mm
MRP ₹ 1180/-

Model : 24027
Color : White
Size : 430 x 280 x 150 mm
MRP ₹ 1630/-

Model : 24028
Color : White
Size : 380 x 275 x 150 mm
MRP ₹ 1090/-

Model : 24029
Color : White
Size : 360 x 290 x 180 mm
MRP ₹ 1090/-

Model : 24030 Color : White
Size : 440 x 330 x 220 mm
Wall Hung Wash Basin
MRP ₹ 1090/-

Model : 24061 Color : White
Size : 415 x 210 x 115 mm
Wall Hung Wash Basin
MRP ₹ 1450/-

Model : 24062 Color : White
Size : 380 x 265 x 125 mm
Wall Hung Wash Basin
MRP ₹ 1450/-

TOYO
SANITARY WARES

Counter Top Basins

White Sanitary Wares

Your Dream Bathroom Starts Here

Model : 24001
Size : 820 x 415 x 135 mm (32" x 17")
Color : White

MRP ₹ 13600/-

Model : 24002
Size : 620 x 410 x 120 mm (25" x 16")
Color : White

MRP ₹ 7300/-

Model : 24003
Size : 590 x 400 x 140 mm (23" x 16")
Color : White

MRP ₹ 6600/-

Model : 24004
Size : 670 x 440 x 145 mm (27" x 18")
Color : White

MRP ₹ 7300/-

Model : 24005
Size : 560 x 330 x 190 mm (22" x 13")
Color : White

MRP ₹ 10500/-

Model : 24006
Size : 600 x 400 x 160 mm (24" x 16")
Color : White

MRP ₹ 10500/-

Model : 24007
Size : 710 x 380 x 130 mm (28" x 15")
Color : White

MRP ₹ 9200/-

Model : 24008
Size : 660 x 405 x 160 mm (26" x 16")
Color : White

MRP ₹ 9200/-

Model : 24009
Size : 420 x 420 x 150 mm (17" x 17")
Color : White

MRP ₹ 8200/-

Model : 24010
Size : 500 x 425 x 155 mm (20" x 17")
Color : White

MRP ₹ 8700/-

Model : 24011
Size : 425 x 425 x 155 mm (17" x 17")
Color : White

MRP ₹ 8200/-

Model : 24012
Size : 590 x 405 x 150 mm (24" x 16")
Color : White

MRP ₹8200/-

Model : 29001
Size : 570 x 395 x 220 mm (23" x 16")
Color : White

MRP ₹ 6000/-

Model : 29003
Size : 515 x 380 x 190 mm (21" x 15")
Color : White

MRP ₹ 6200/-

Model : 29002
Size : 495 x 340 x 195 mm (20" x 14")
Color : White

MRP ₹ 5600/-

Model : 29004
Size : 500 x 370 x 195 mm (20" x 15")
Color : White

MRP ₹ 5800/-

Model : 24031
Color : White
Size : 620 x 410 x 100 mm

MRP ₹ 4600/-

Model : 24032
Color : White
Size : 600 x 380 x 115 mm

MRP ₹ 4600/-

Model : 24033
Color : White
Size : 485 x 370 x 130 mm

MRP ₹ 3700/-

New Model : 24095
Size : 330 x 290 x 155 mm

Model : 24034
Color : White
Size : 350 x 300 x 120 mm

MRP ₹ 2350/-

Model : 24035
Color : White
Size : 410 x 410 x 120 mm

MRP ₹ 3700/-

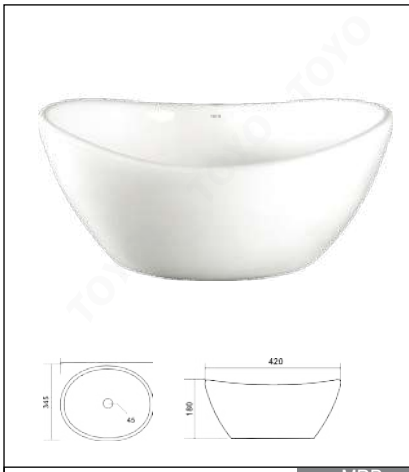

Model : 24036
Color : White
Size : 420 x 350 x 180 mm

MRP ₹ 2530/-

Model : 24037
Color : White
Size : 590 x 350 x 160 mm

MRP ₹ 3700/-

Model : 24038
Color : White
Size : 460 x 380 x 130 mm

MRP ₹ 3700/-

Model : 24039
Color : White
Size : 485 x 375 x 135 mm

MRP ₹ 3700/-

Model : 24040
Color : White
Size : 415 x 415 x 125 mm

MRP ₹ 3700/-

Model : 24041
Color : White
Size : 525 x 335 x 125 mm

MRP ₹ 3700/-

Model : 24042
Color : White
Size : 430 x 320 x 120 mm

MRP ₹ 2530/-

Model : 24043
Color : White
Size : 400 x 285 x160 mm

MRP ₹ 3070/-

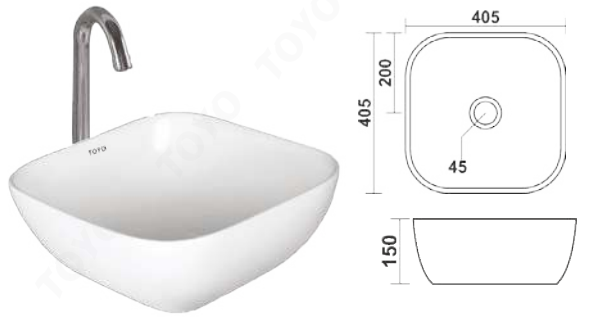

Model : 24044
Color : White
Size : 405 x 405 x 150 mm

MRP ₹ 3970/-

New Model : 24094
Size : 455 x 340 x 130 mm

Model : 24045
Color : White
Size : 450 x 315 x 135 mm

MRP ₹ 2800/-

Model : 24046
Color : White
Size : 550 x 375 x 115 mm

MRP ₹ 5500/-

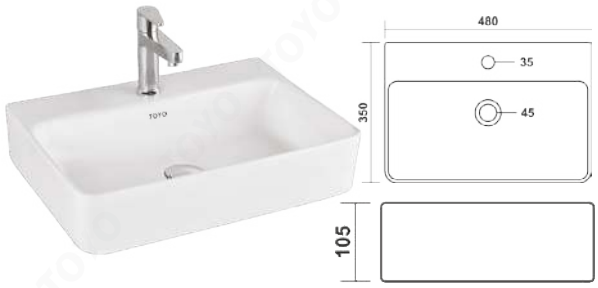

Model : 24047
Color : White
Size : 480 x 350 x 105 mm

MRP ₹ 3700/-

Model : 25013-White
Size : 585 x 490 x 860 mm

MRP | Full Set : ₹ 4780/-
Basin : ₹ 2390/-
Pedestal : ₹ 2390/-

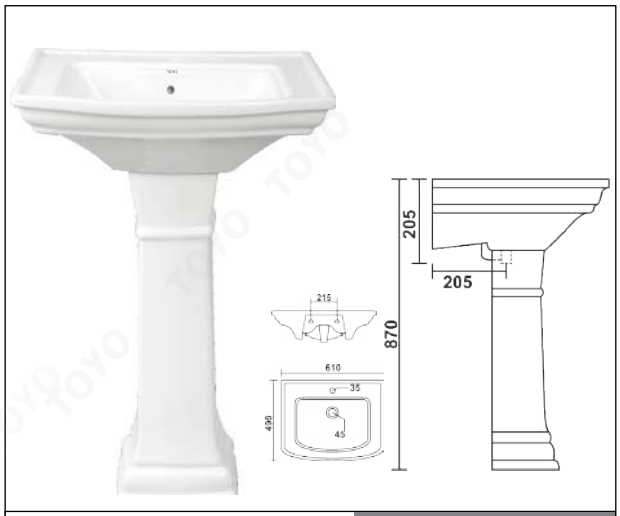

Model : 25014-White
Size : 610 x 490 x 860 mm

MRP | Full Set : ₹ 5600/-
Basin : ₹ 2800/-
Pedestal : ₹ 2800/-

Model : 25015-White
Size : 560 x 470 x 860 mm

MRP | Full Set : ₹ 4600/-
Basin : ₹ 2300/-
Pedestal : ₹ 2300/-

Model : 25016-White
Size : 530 x 425 x 860 mm

MRP | Full Set : ₹ 3300/-
Basin : ₹ 1650/-
Pedestal : ₹ 1650/-

Model : 25017-White
Size : 600 x 480 x 870 mm

MRP | Full Set : ₹ 4960/-
Basin : ₹ 2480/-
Pedestal : ₹ 2480/-

Model : 25018-White
Size : 595 x 485 x 860 mm

MRP | Full Set : ₹ 4960/-
Basin : ₹ 2480/-
Pedestal : ₹ 2480/-

Model : 25019-White
Size : 600 x 485 x 860 mm

MRP
Full Set : ₹ 4960/-
Basin : ₹ 2480/-
Pedestal : ₹ 2480/-

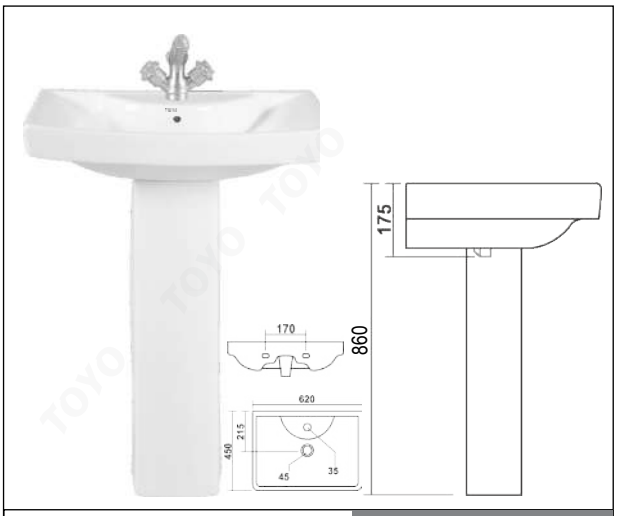

Model : 25020-White
Size : 620 x 450 x 860 mm

MRP
Full Set : ₹ 4200/-
Basin : ₹ 2100/-
Pedestal : ₹ 2100/-

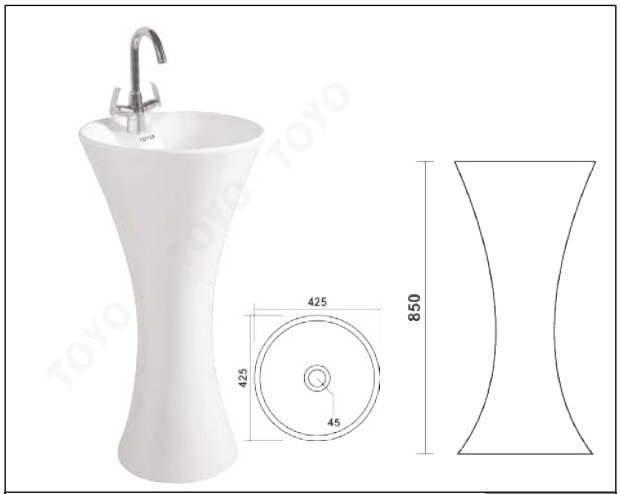

Model : 25021-White
Size : 425 x 425 x 850 mm
One Piece Pedestal Wash Basin

MRP
₹ 10000/-

Model : 28001-White
Size : 550 x 460 x 370 mm
One Piece Wall Hung Basin

MRP
₹ 7300/-

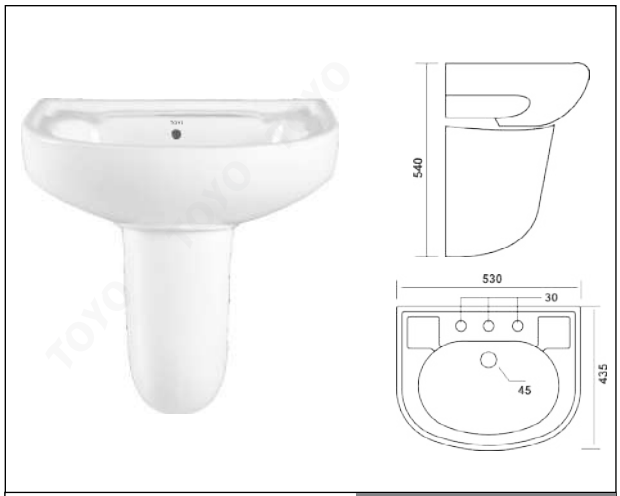

Model : 28003-White
Size : 530 x 430 x 540 mm
Half Pedestal Basin

MRP
Full Set : ₹ 3300/-
Basin : ₹ 1650/-
Pedestal : ₹ 1650/-

Model : 28004-White
Size : 560 x 480 x 465 mm
Half Pedestal Basin

MRP
Full Set : ₹ 4960/-
Basin : ₹ 2480/-
Pedestal : ₹ 2480/-

Model : 27021
Color : White
Size : 690 X 330 X 290 mm

MRP ₹ 17200/-

Model : 27023
Color : White
Size : 630 X 320 X 340 mm

MRP ₹ 21700/-

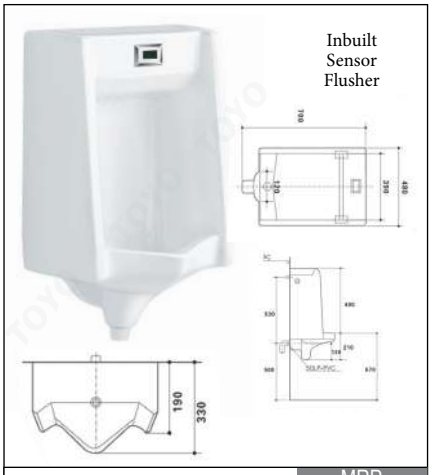

Model : 27024
Color : White
Size : 735 X 305 X 485 mm

MRP ₹ 22600/-

Model : 27022
Color : White
Size : 485 X 290 X 250 mm

MRP ₹ 6400/-

Urinal

Model : 27011
Color : White
Size : 510 x 335 x 340 mm

MRP ₹ 3700/-

Urinal

Model : 27012
Color : White
Size :450 x 320 x 265 mm

MRP ₹1360/-

Small Urinal

Model : 27014
Color : White
Size : 400 X 250 X 290 mm

MRP ₹ 2620/-

Large Urinal

Model : 27015
Color : White
Size : 590 x 350 x 370 mm

MRP ₹ 4600/-

Female Urinal

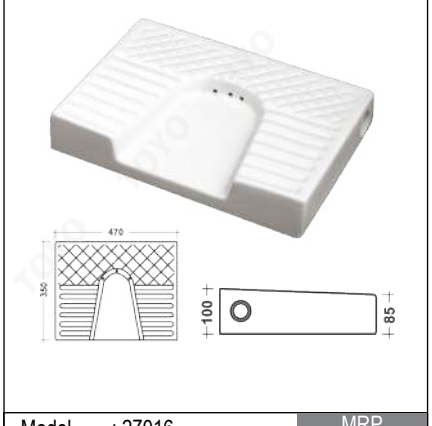

Model : 27016
Color : White
Size : 470 x 350 x 150 mm

MRP ₹ 1450/-

Pneumatic Concealed Cistern

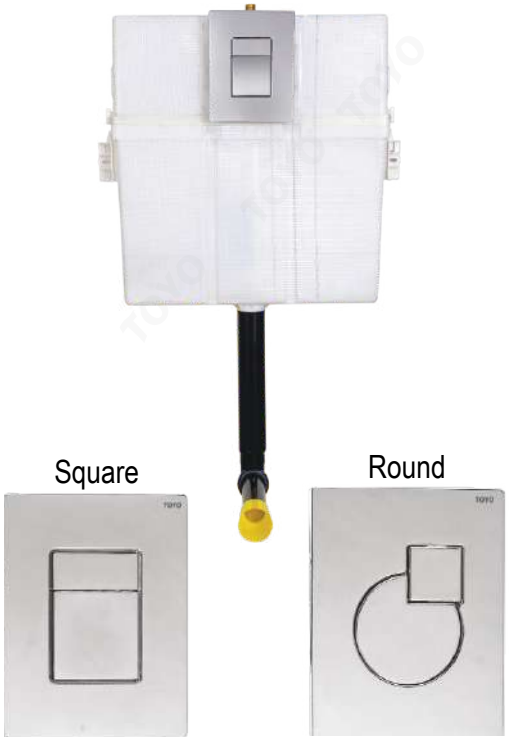

Features :

- 80 mm Extra slim Cistern fits easily even in partition walls
- Fiber Glass mesh net for proper holding in installation
- Tank water capacity 10 ltr.
- Water supply from top
- Water level adjustment with a special lever
- For way direction adjustable flush pipe
- Better flushing performance due to 51 mm inner dia outlet pipe
- Water filing in tank within 3 min.
- 10 ltr. Water release time 3.75 seconds.
- Water saving dual flush
- Dual flush Technology
- Vertical & Horizontal Installation
- 155 x 196 mm

DISCONTINUED

Model : 31011
Sizes (HxWxP) : 55 x 58 x 8 cm
Volume : 3 L / 6 L

MRP
Full Set : ₹ 7800/-
Tank : ₹ 5000/-
Push Plate : ₹ 2800

Model : "Q"
Color : Chrome
MRP ₹ 1770/-

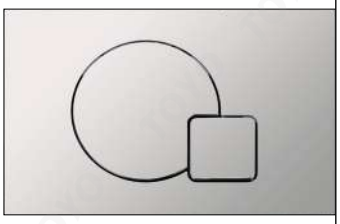

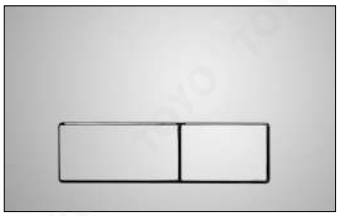

Model : "H"
Color : Chrome
MRP ₹ 1770/-

Model : "F"
Color : Chrome
MRP ₹ 1770/-

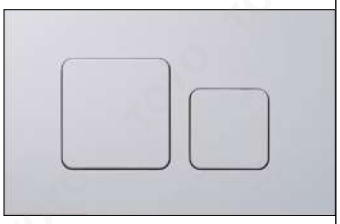

Model : 31001
Sizes (HxWxP) : 45 x 50 x 8 cm
Volume : 3 L / 6 L
Material (Tank) : HDPE
Material (Internal Parts) : Derlin, ABS, Nylon & Co-Polymers

Features:
Heavy Duty tank
Super Shining and long lasting chrome
All high quality vergin material internal parts.
Excellent Performance

MRP
Full Set : ₹ 7090/-
Tank : ₹ 5320/-
Push Plate : ₹ 1770

Dual Flushing Cistern

Pacific

Model Name	: Pacific	MRP : ₹ 2260/-
Model No	: 33005	
Capacity	: 10 ltr.	
Color	: White	

Top Push Single Flushing Cistern

Atlantic

Model Name	: Atlantic	MRP : ₹ 1400/-
Model No	: 33006	
Capacity	: 8 ltr.	
Color	: White	

"Side Handle" Single Flushing Cistern

Indian

Model Name	: Indian	MRP : ₹ 1290/-
Model No	: 33007	
Capacity	: 10 ltr.	
Color	: White	

Long Bend | MRP : ₹ 160/-

Ball Cock (Dual Flush) | MRP : ₹ 550/-

Ball Cock (Single Flush) | MRP : ₹ 190/-

Syphon (Dual Flush) | MRP : ₹ 730/-

Syphon (Single Flush) | MRP : ₹ 280/-

Handle Lever (Single Flush) | MRP : ₹ 110/-

TOYO
SANITARY WARES

Ceramic Art Basins

Practicality, Beauty & Uniqueness is the Hallmark of TOYO

Features :

Use of Finest Raw materials - Purified, Tested & Certified.
High Tempered Firing & Latest Technology of Finishing are used.
Use of Adavanced German Technology .
Each Product goes through stringent Quality check.
Excellent Packaging with 7 Layers Carton & 6 Sides Foam.

Unique Feature :

Every piece goes through a very complex process of double firing. Firstly it's fired at 1200˚c followed by 2nd firing at 600˚c. This gives our basins extra brightness & longetivity.

MRP :₹ 10200

New Model Color	: Rose-101 : Golden Cloudy	Old Model : 512

MRP :₹ 9800

New Model Color	: Rose-104 : White & Golden	Old Model : 512

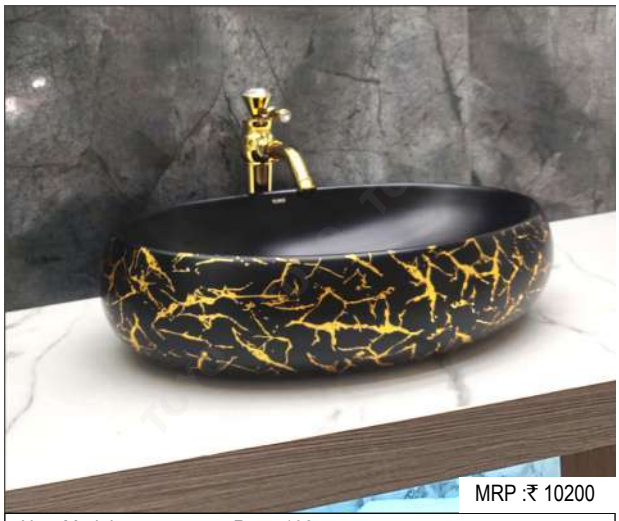

MRP :₹ 10200

New Model Color	: Rose-102 : Premium Black with Golden Line	Old Model : 512

MRP :₹ 9800

New Model Color	: Rose-105 : White & Silver	Old Model : 512

MRP :₹ 12400

New Model Color	: Rose-103 : Black & Golden	Old Model : 512

MRP :₹ 9800

New Model Color	: Rose-106 : White & Rose Gold	Old Model : 512

MRP :₹ 9800

New Model Color	: Rose-107 : White & Golden	Old Model : 517

MRP :₹ 9800

New Model Color	: Rose-110 : White & Golden	Old Model : 521

MRP : ₹ 9800

New Model Color	: Rose-108 : White & Silver	Old Model : 517

MRP :₹ 9800

New Model Color	: Rose-111 : White & Silver	Old Model : 521

MRP : ₹ 9800

New Model Color	: Rose-109 : White & Rose Gold	Old Model : 517

MRP : ₹ 9800

New Model Color	: Rose-112 : White & Rose Gold	Old Model : 521

New Model Color	: Suc-551 : White & Golden	Old Model : 551

New Model Color	: Rose-113 : White Marble Glossy	Old Model : 512

New Model Color	: Rose-114 : White Marble Matt	Old Model : 512

New Model Color	: Rose-115 : Black Marble Glossy	Old Model : 512

New Model Color	: Rose-116 : Black Marble Matt	Old Model : 512

New Model Color	: Rose-117 : Light Grey Marble Glossy	Old Model : 512

Rose Series
600 x 400 x 160 mm
(24" x 16")

Ceramic Art Basins

Old Color Name : Dark Brown Marble Glossy

MRP : ₹ 8600

New Model : Rose-118
Color : Greenish Brown Marble Glossy

Old Model : 512

MRP : ₹ 8600

New Model : Rose-119
Color : Blue Marble Glossy

Old Model : 512

MRP : ₹ 8600

New Model : Rose-120
Color : Black Line

Old Model : 512

MRP : ₹ 8600

New Model : Rose-121
Color : Brown Onyx

Old Model : 512

MRP : ₹ 8600

New Model : Rose-122
Color : Yellow Onyx

Old Model : 512

New Model : Daisy-141
Color : White Marble Matt
Old Model : 572

New Model : Daisy-142
Color : Black Marble Matt
Old Model : 572

New Model : Daisy-143
Color : Light Brown Marble Matt
Old Model : 572

New Model : Daisy-144
Color : Light Grey Marble Matt
Old Model : 572

New Model : Daisy-145
Color : Brown & Yellow Onyx Glossy
Old Model : 572

New Model : Mimosa-151
Color : Black Marble & Rose Gold Matt
Old Model : 542

New Model Color	: Camel-161 : White Marble Matt	Old Model : 534

New Model Color	: Ane-171 : White Marble Matt	Old Model : 24001

New Model Color	: Camel-162 : Black Marble Matt	Old Model : 534

New Model Color	: Ane-172 : Black Marble Matt	Old Model : 24001

New Model Color	: Camel-163 : Light Grey Marble Matt	Old Model : 534

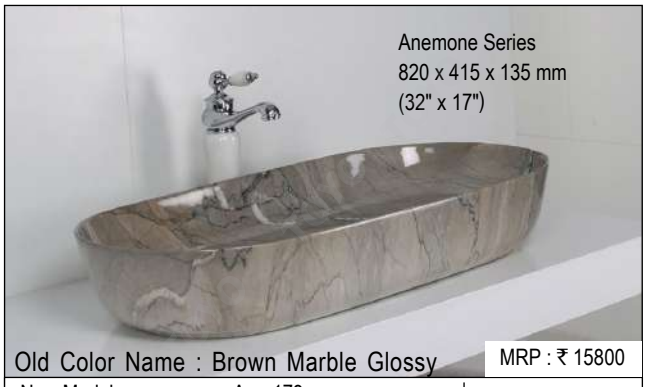

New Model Color	: Ane-173 : Light Grey Marble Glossy	Old Model : 24001

New Model Color	: Camel-164 : Light Brown Marble Matt	Old Model : 534

New Model Color	: Ane-174 : Dark Grey Marble Glossy	Old Model : 24001

MRP : ₹ 8400

New Model : Cobra-181
Color : White Marble Glossy

Old Model : 24003

MRP : ₹ 8400

New Model : Cobra-182
Color : White Marble Matt

Old Model : 24003

MRP : ₹ 8400

New Model : Cobra-183
Color : Black Marble Glossy

Old Model : 24003

MRP : ₹ 8400

New Model : Cobra-184
Color : Black Marble Matt

Old Model : 24003

MRP : ₹ 8400

New Model : Cobra-185
Color : Brown Onyx Glossy

Old Model : 24003

MRP : ₹ 9200

New Model : Poppy-191
Color : White & Golden

Old Model : 576

MRP : ₹ 9200

New Model : Poppy-192
Color : White & Silver

Old Model : 576

MRP : ₹ 9200

New Model : Poppy-193
Color : White & Blue

Old Model : 576

Old Color Name : Full Copper

MRP : ₹ 9200

New Model : Poppy- 194
New Color Name : Full Rose Gold

Old Model : 576

MRP : ₹ 9200

New Model : Poppy- 195
New Color Name : Wooden Brown Glossy

Old Model : 576

MRP : ₹ 7400

New Model : Poppy-196 Color : White Marble Glossy	Old Model : 576

MRP : ₹ 7400

New Model : Poppy-197 Color : White Marble Matt	Old Model : 576

MRP : ₹ 7400

New Model : Poppy-198 Color : Black Marble Glossy	Old Model : 576

MRP : ₹ 7400

New Model : Poppy-199 Color : Black Marble Matt	Old Model : 576

MRP : ₹ 7400

New Model : Poppy-200 Color : Brown Onyx Matt	Old Model : 576

MRP : ₹ 7400

New Model : Poppy-201 Color : Yellow Onyx Matt	Old Model : 576

New Model Color	: Poppy-202 : Dark Grey Marble Matt	Old Model : 576

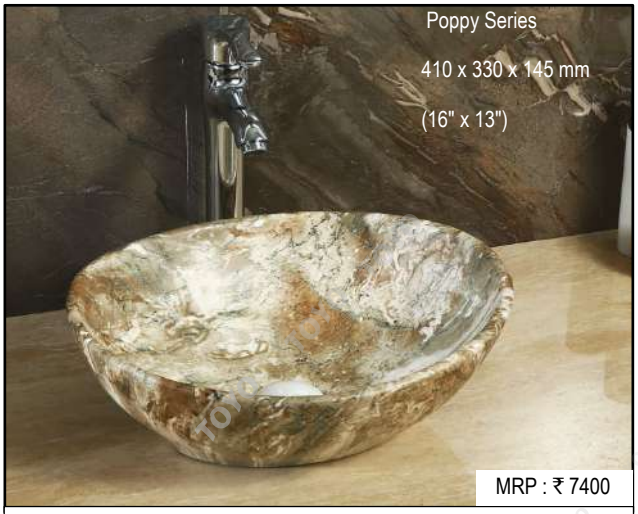

New Model Color	: Poppy-203 : Green Marble Matt	Old Model : 576

New Model Color	: Crocus-211 : White Marble Glossy	Old Model : 541

New Model Color	: Crocus- 212 : Wooden Black Glossy	Old Model : 541

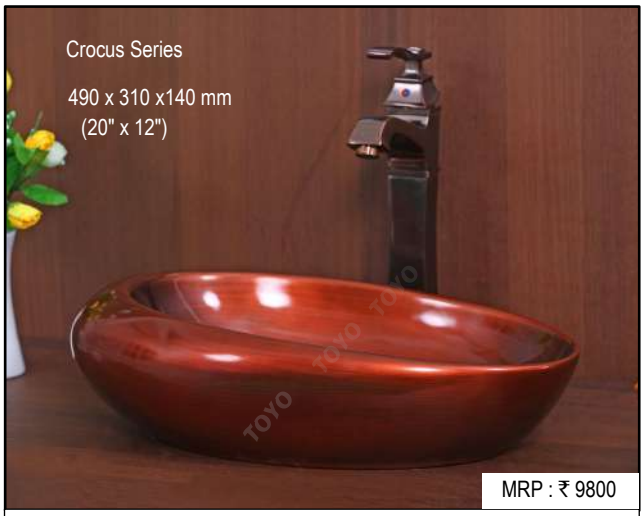

New Model Color	: Crocus-213 : Wooden Brown Glossy	Old Model : 541

New Model Color	: Crocus-214 : White & Black Glossy	Old Model : 541

MRP : ₹ 8400

New Model Color	: Tulip-221 : Orange Marble & Texture (Double Finish)	Old Model : 536

MRP : ₹ 8800

New Model Color	: Tulip-224 : White & Golden	Old Model : 536

MRP : ₹ 8400

New Model Color	: Tulip-222 : Brown Marble & Texture (Double Finish)	Old Model : 536

MRP : ₹ 8800

New Model Color	: Tulip-225 : White & Silver	Old Model : 536

MRP : ₹ 8400

New Model Color	: Tulip-223 : Black Marble & Texture (Double Finish)	Old Model : 536

MRP : ₹ 8800

New Model Color	: Tulip-226 : White & Rose Gold	Old Model : 536

MRP : ₹ 8200

New Model : Snow-231
Color : White Marble Glossy

Old Model : 520

MRP : ₹ 8200

New Model : Snow-232
Color : White Marble Matt

Old Model : 520

MRP : ₹ 8200

New Model : Snow-233
Color : Black Marble Glossy

Old Model : 520

MRP : ₹ 8200

New Model : Snow-234
Color : Black Marble Matt

Old Model : 520

MRP : ₹ 8200

New Model : Snow-235
Color : Brown Onyx Glossy

Old Model : 520

MRP : ₹ 9400

New Model : Snow-236
Color : White & Golden

Old Model : 520

MRP : ₹ 9400

New Model : Snow-237
Color : White & Silver

Old Model : 520

MRP : ₹ 9400

New Model : Snow-238
Color : White & Rose Gold

Old Model : 520

MRP : ₹ 8000

New Model Color	: Lily-251 : White Marble Matt	Old Model : 575

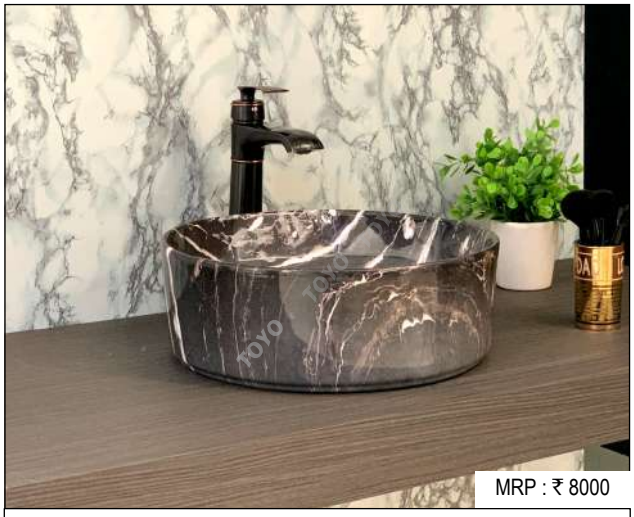

MRP : ₹ 8000

New Model Color	: Lily-252 : Black Marble Glossy	Old Model : 575

MRP : ₹ 8000

New Model Color	: Lily-253 : Black Marble Matt	Old Model : 575

MRP : ₹ 8000

New Model Color	: Lily-254 : Green Onyx Matt	Old Model : 575

MRP : ₹ 9400

New Model Color	: Lily-255 : Wooden Brown Glossy	Old Model : 575

MRP : ₹ 9400

New Model Color	: Lily-256 : Premium Black with Golden Line	Old Model : 575

MRP : ₹ 8600

New Model : Iris-261 Color : White Marble Glossy	Old Model : 543

MRP : ₹ 8600

New Model : Iris-262 Color : White Marble Matt	Old Model : 543

MRP : ₹ 8600

New Model : Iris-263 Color : Black Marble Glossy	Old Model : 543

MRP : ₹ 8600

New Model : Iris-264 Color : Black Marble Matt	Old Model : 543

MRP : ₹ 9800

New Model : Iris-265 Color : Blue Texture	Old Model : 543

MRP : ₹ 9800

New Model : Iris-266 Color : White & Golden	Old Model : 543

MRP : ₹ 9800

New Model : Iris-267 Color : White & Silver	Old Model : 543

MRP : ₹ 9800

New Model : Iris-268 Color : White & Rose Gold	Old Model : 543

New Model : Blos-281 Color : Golden	Old Model : 538

New Model : Blos-282 Color : Silver	Old Model : 538

New Model : Blos-283 Color : Rose Gold	Old Model : 538

New Model : Pansy-291 Color : Silver	Old Model : 563-S

New Model : Pansy-292 Color : Brown & Bronze	Old Model : 564-BB

New Model : Pansy-293 Color : White & Bronze	Old Model : 564-WB

New Model : Orchid-301 Color : White & Golden	Old Model : 514

New Model : Orchid-302 Color : White & Silver	Old Model : 514

New Model Color	: Zin-311 : Bronze	Old Model : 562

New Model Color	: Flax-312 : Black Texture (Double Finish)	Old Model : 545

New Model Color	: Hip-313 : Black & White	Old Model : 580

New Model Color	: Aster-314 : Black & White (Antique)	Old Model : 567

New Model Color	: Hib-321 : Orange Marble Glossy (Rock Finish)	Old Model : 583

New Model Color	: Hib-322 : Sky Blue Marble Glossy (Rock Finish)	Old Model : 583

New Model Color	: Jas-331 : Copper & Purple	Old Model : 578

New Model Color	: Jas-332 : Rainbow	Old Model : 578

MRP : ₹ 7800

New Model Color	: Mari-341 : White Marble Matt	Old Model : 526

MRP : ₹ 7800

New Model Color	: Mari-342 : Black Marble Glossy	Old Model : 526

MRP : ₹ 7800

New Model Color	: Mari-343 : Black Marble Matt	Old Model : 526

Old Color Name : Brown Marble Glossy

MRP : ₹ 7800

New Model Color	: Mari-344 : Light Grey Marble Glossy	Old Model : 526

MRP : ₹ 7800

New Model Color	: Mari-345 : Brown Onyx	Old Model : 526

MRP : ₹ 7800

New Model Color	: Mari-346 : Yellow Onyx	Old Model : 526

Old Color Name : Black Marble

MRP : ₹ 7800

New Model Color	: Mari-347 : Black & Grey Marble	Old Model : 526

Periwinkle Series
380 x 380 x 130 mm
(15" x 15")

MRP : ₹ 9800

New Model Color	: Peri-351 : Black & White (Antique)	Old Model : 570

Primrose Series
450 x 400 x 140 mm
(18" x 16")

Ceramic Art Basins

MRP : ₹ 12000

New Model : Prim-361
Color : Black & Gold

Old Model : 529

MRP : ₹ 9800

New Model : Prim-362
Color : White & Golden

Old Model : 529

MRP : ₹ 9800

New Model : Prim-363
Color : White & Silver

Old Model : 529

MRP : ₹ 8600

New Model : Prim-364
Color : White Marble Glossy

Old Model : 529

MRP : ₹ 8600

New Model : Prim-365
Color : Yellow Onyx Glossy

Old Model : 529

MRP : ₹ 11000

New Model : Lav-371
Color : Golden
Old Model : 539-A

MRP : ₹ 11000

New Model : Lav-372
Color : Silver
Old Model : 539-A

MRP : ₹ 11000

New Model : Lav-373
Color : Rose Gold
Old Model : 539-A

MRP : ₹ 8200

New Model : Lav-374
Color : White Marble Matt
Old Model : 539

MRP : ₹ 8200

New Model : Lav-375
Color : Black Marble Matt
Old Model : 539

MRP : ₹ 8200

New Model : Lav-376
Color : Dark Grey Marble Glossy
Old Model : 539

MRP : ₹ 8200

New Model : Lav-377
Color : Brown Onyx Matt
Old Model : 539

MRP : ₹ 8200

New Model : Lav-378
Color : Yellow Marble Matt
Old Model : 539

MRP : ₹ 9400

New Model Color	: Car-391 : Golden Cloudy	Old Model : 574

MRP : ₹ 9400

New Model Color	: Car-392 : Premium Black with Golden Line	Old Model : 574

MRP : ₹ 7800

New Model Color	: Car-393 : White Marble Matt	Old Model : 574

MRP : ₹ 7800

New Model Color	: Car-394 : Black Marble Glossy	Old Model : 574

MRP : ₹ 7800

New Model Color	: Car-395 : Black Marble Matt	Old Model : 574

Old Color Name : Brown Marble Glossy

MRP : ₹ 7800

New Model Color	: Car-396 : Light Grey Marble Glossy	Old Model : 574

MRP : ₹ 7800

New Model Color	: Car-397 : Brown Marble Matt	Old Model : 574

MRP : ₹ 7800

New Model Color	: Car-398 : Pink Marble Matt	Old Model : 574

MRP : ₹ 9200

New Model Color	: Daf-411 : White & Golden	Old Model : 527

MRP : ₹ 9200

New Model Color	: Daf-415 : White & Golden	Old Model : 527

MRP : ₹ 9200

New Model Color	: Daf-412 : White & Silver	Old Model : 527

MRP : ₹ 9200

New Model Color	: Daf-416 : White & Silver	Old Model : 527

MRP : ₹ 9200

New Model Color	: Daf-413 : White & Rose Gold	Old Model : 527

MRP : ₹ 9200

New Model Color	: Daf-417 : White & Rose Gold	Old Model : 527

MRP : ₹ 11200

New Model Color	: Daf-414 : Black & Gold	Old Model : 527

MRP : ₹ 9600

New Model Color	: Daf-418 : Metallic	Old Model : 527

MRP : ₹ 7800

New Model Color	: Daf-421 : White Marble Glossy	Old Model : 527

MRP : ₹ 7800

New Model Color	: Daf-422 : White Marble Matt	Old Model : 527

MRP : ₹ 7800

New Model Color	: Daf-423 : Black Marble Glossy	Old Model : 527

MRP : ₹ 7800

New Model Color	: Daf-424 : Black Marble Matt	Old Model : 527

Old Color Name : Brown Marble Glossy

MRP : ₹ 7800

New Model Color	: Daf-425 : Light Grey Marble Glossy	Old Model : 527

MRP : ₹ 7800

New Model Color	: Daf-426 : Brown Onyx	Old Model : 527

MRP : ₹ 7800

New Model Color	: Daf-427 : Yellow Marble	Old Model : 527

MRP : ₹ 7800

New Model Color	: Daf-428 : Blue Marble	Old Model : 527

MRP : ₹ 8600

New Model : Sun-441
Color : White & Grey Marble Glossy

Old Model : 582

MRP : ₹ 8600

New Model : Sun-442
Color : White Marble Matt

Old Model : 582

MRP : ₹ 8600

New Model : Sun-443
Color : Black Marble Glossy

Old Model : 582

MRP : ₹ 8600

New Model : Sun-444
Color : Black Marble Matt

Old Model : 582

MRP : ₹ 8600

New Model : Sun-445
Color : Dark Grey Marble Glossy

Old Model : 582

Old Color Name : Brown Marble Glossy

MRP : ₹ 8600

New Model : Sun-446
Color : Light Grey Marble Glossy

Old Model : 582

TOYO SANITARY WARES

Sunny Series
610 x 410 x 130 mm
(24" x 16")

Fressia Series
520 x 420 x 140 mm
(21" x 17")

Ceramic Art Basins

MRP : ₹ 8600

New Model	: Sun-447	Old Model : 582
Color	: Brown & Yellow Onyx	

MRP : ₹ 8600

New Model	: Free- 451	Old Model : 581
Color	: White Marble Matt	

MRP : ₹ 8600

New Model	: Free-452	Old Model : 581
Color	: Black Marble Glossy	

MRP : ₹ 8600

New Model	: Free-453	Old Model : 581
Color	: Black Marble Matt	

Old Color Name : Brown Marble Glossy

MRP : ₹ 8600

New Model	: Free-454	Old Model : 581
Color	: Light Grey Marble Glossy	

MRP : ₹ 8600

New Model	: Free-455	Old Model : 581
Color	: Dark Grey Marble Glossy	

MRP : ₹ 8600

New Model	: Free-456	Old Model : 581
Color	: White & Black Marble Glossy	

MRP : ₹ 8600

New Model	: Free-457	Old Model : 581
Color	: Yellow Marble Glossy	

Single Lever Brass Basin Mixers/ Sink Mixers

Practicality, Beauty and Uniqueness is the Hallmark of TOYO

Model : 1021-G
Height : 20 cm (8")
Color : Golden

MRP : ₹ 7660

Model : 1021-RG
Height : 20 cm (8")
Color : Rose Gold

MRP : ₹ 7660

Model : 1022-G
Height : 30 cm (12")
Color : Golden

MRP : ₹ 8660

Model : 1022-RG
Height : 30 cm (12")
Color : Rose Gold

MRP : ₹ 8660

Model : 1052-8-G
Height : 20 cm (8")
Color : Golden

MRP : ₹ 7660

Model : 1052-8-RG
Height : 20 cm (8")
Color : Rose Gold

MRP : ₹ 7660

Model : 1052-12-G
Height : 30 cm (12")
Color : Golden

MRP : ₹ 8660

Model : 1052-12-RG
Height : 30 cm (12")
Color : Rose Gold

MRP : ₹ 8660

Model : 1054-12
Height : 30 cm (12")
Color : Antique Copper

MRP : ₹ 12800

Model : 1054-8
Height : 20 cm (8")
Color : Antique Copper

MRP : ₹ 10800

Model : 1056-BG
Height : 30 cm (12")
Color : Black & Golden with Light Green Onyx

MRP : ₹ 14000

Model : 1056-G
Height : 30 cm (12")
Color : Golden With Yellow Onyx

MRP : ₹ 14000

Model : 1055-BG
Height : 20 cm (8")
Color : Black & Golden

MRP : ₹ 11800

Model : 1055-WG
Height : 20 cm (8")
Color : White & Golden

MRP : ₹ 11800

Model : 1058-G
Height : 20 cm (8")
Color : Golden

MRP : ₹ 9800

Model : 1058-RG
Height : 20 cm (8")
Color : Rose Gold

MRP : ₹ 9800

Model : 1060-WG
Height : 20 cm (8")
Color : White & Gold

MRP : ₹ 9200

Model : 1060-BG
Height : 20 cm (8")
Color : Black & Gold

MRP : ₹ 9200

Model : 1051-12
Height : 30 cm (12")
Color : ORB

MRP : ₹ 8840

Model : 1051-8
Height : 20 cm (8")
Color : ORB

MRP : ₹ 7840

Model : 1053
Height : 20 cm (8")
Color : Black & Gold

MRP : ₹ 7300

Model : 1059
Height : 30 cm (12")
Color : Antique Black

MRP : ₹ 8840

Model : 1068 A-Antique
Height : 30 cm (12")
Color : Antique Brass

MRP : ₹ 5700

Model : 1068 A-CP
Height : 30 cm (12")
Color : Chrome

MRP : ₹ 5200

Model : 1068 B-ORB
Height : 30 cm (12")
Color : ORB

MRP : ₹ 6400

Model : 1068 B-Antique
Height : 30 cm (12")
Color : Antique Brass

MRP : ₹ 5700

Model : 1068 B-CP
Height : 30 cm (12")
Color : Chrome

MRP : ₹ 5200

Model : 1069-Antique
Height : 30 cm (12")
Color : Antique Brass

MRP : ₹ 6800

Model : 1072-12
Height : 30 cm (12")
Color : White & Chrome

MRP : ₹ 15400

Model : 1072-8
Height : 20 cm (8")
Color : White & Chrome

MRP : ₹ 12800

Model : 1067- 8 wh & cp
Height : 20 cm (8")
Color : Chrome & White Marble

MRP : ₹ 7000

Model : 1067- 8 wh & blk
Height : 20 cm (8")
Color : Black & White Marble

MRP : ₹ 7400

Model : 1067- 8 yl & cp
Height : 20 cm (8")
Color : Chrome & Yellow Onyx

MRP : ₹ 7000

Model : 1067-12 wh & cp
Height : 30 cm (12")
Color : Chrome & White Marble

MRP : ₹ 8000

Model : 1067-12 wh-blk
Height : 30 cm (12")
Color : Black & White Marble

MRP : ₹ 8400

Model : 1067-12 yl-cp
Height : 30 cm (12")
Color : Chrome & Yellow Onyx

MRP : ₹ 8600

Model : 1067-12 -G
Height : 30 cm (12")
Color : Golden & Yellow Onyx

MRP : ₹ 8400

Model : 1067-8 -G
Height : 20 cm (8")
Color : Golden & Yellow Onyx

MRP : ₹ 7400

Model : 1067-12-RG
Height : 30 cm (12")
Color : Rose Gold & Yellow Onyx

MRP : ₹ 8400

Model : 1067-8-RG
Height : 20 cm (8")
Color : Rose Gold & Yellow Onyx

MRP : ₹ 7400

Model : 1091-CP
Color : Chrome
Wall Mounted Concealed Single Lever Basin Mixer

MRP : ₹ 18600

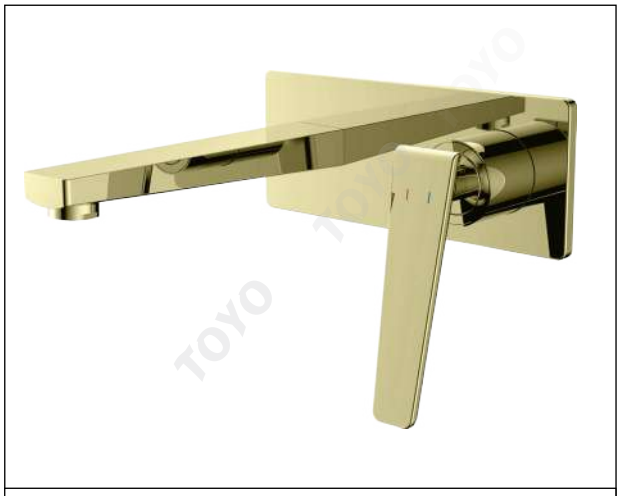

Model : 1091-G
Color : Golden
Wall Mounted Concealed Single Lever Basin Mixer

MRP : ₹ 23000

Model : 1091-RG
Color : Rose Gold
Wall Mounted Concealed Single Lever Basin Mixer

MRP : ₹ 23000

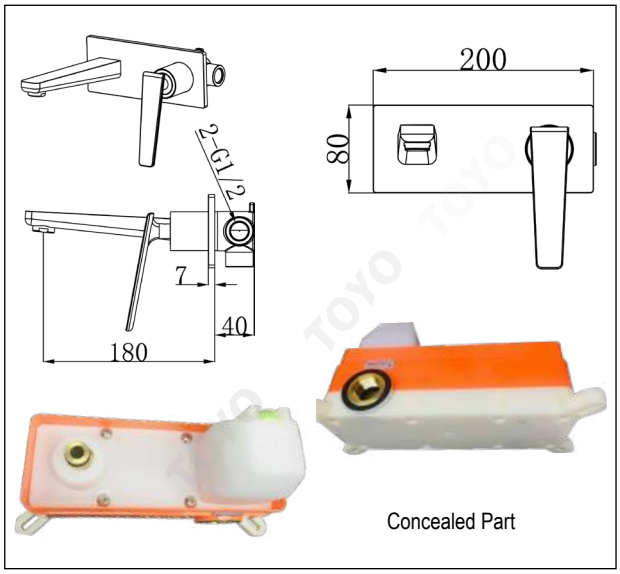

Model : 1031
Color : Full Chrome
Single Lever Pull Out Basin Mixer

MRP : ₹ 6500

Multi Function Filter

MRP : ₹ 200

Model : 1043
Height : 20 cm (8")
Color : Full Chrome

MRP : ₹ 5500

Model : 1044
Height : 30 cm (12")
Color : Full Chrome

MRP : ₹ 6500

Model : 1041
Height : 20 cm (8")
Color : Full Chrome

MRP : ₹ 5200

Model : 1023
Height : 20 cm (8")
Color : Full Chrome

MRP : ₹ 6800

Model : TOYO 1001
Color : (A) Clear, (D) Black, (E) Brown

MRP
A : ₹ 4200
D & E : ₹ 4400

Model : TOYO 1002
Color : (A) Clear, (D) Black, (E) Brown

MRP
A : ₹ 4400
D & E : ₹ 4600

Model : TOYO 1003
Color : (A) Clear, (D) Black, (E) Brown

MRP
A : ₹ 5200
D & E : ₹ 5400

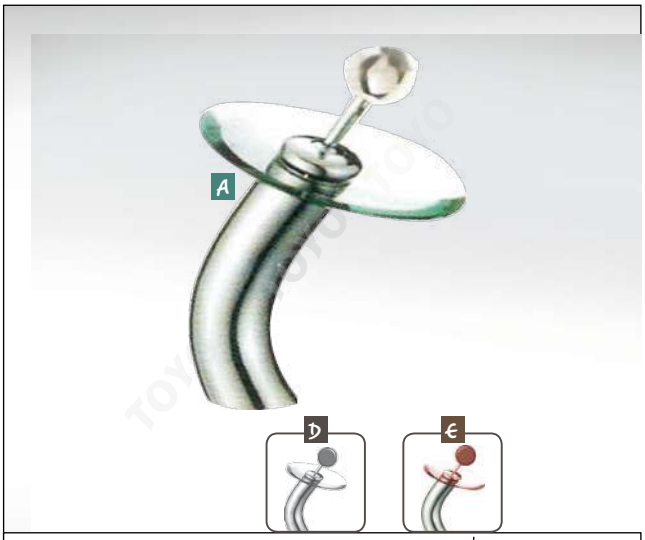

Model : TOYO 1004
Color : (A) Clear, (D) Black, (E) Brown

MRP
A : ₹ 5400
D & E : ₹ 5600

Model : TOYO 1005
Color : (A) Clear, (D) Black, (E) Brown

MRP
A : ₹ 5800
D & E : ₹ 6000

Model : TOYO 1007 Height : 8"
Model : TOYO 1008 Height : 12"
Color : (A) Clear, (D) Black, (E) Brown

MRP
1007-A : ₹ 5800 | D&E : 6000
1008-A : ₹ 6800 | D&E : 7000

Model : 1032
Color : Chrome
Weight : 3.5 kg

MRP : ₹ 16400

Model : 1027
Color : Chrome

MRP : ₹ 9800

Model : 1033
Color : SS Brushed Matt Finish

MRP : ₹ 14500

Model : 1028
Color : Chrome

MRP : ₹ 11800

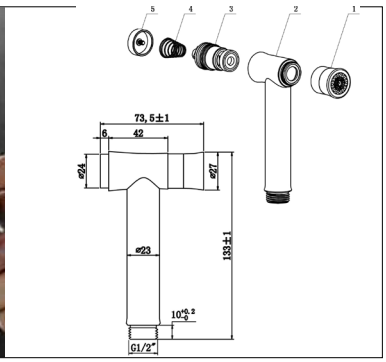

Model : 8523 SS (SS Matt Finish)
Feature : SS 304 Health Faucet / Brass Fitting / 2 Flow

MRP ₹3700

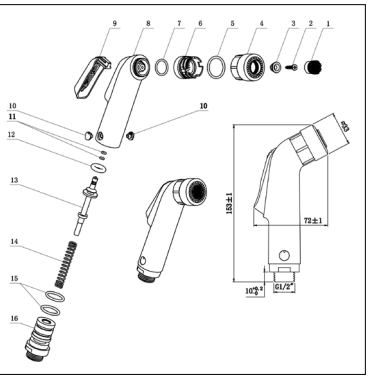

Model : 8521 CP
Feature : ABS Health Faucet / Brass Fitting / 2 Flow

MRP ₹1600

Model : 8503-CP
Color : Chrome
Feature : Full Brass Health Faucet

MRP :₹ 2200/-

Model : 8503-G
Color : Golden
Feature : Full Brass Health Faucet

MRP :₹ 3300/-

Model : 8503-RG
Color : Rose Gold
Feature : Full Brass Health Faucet

MRP :₹ 3300/-

Model : 8503-BG
Color : Black & Gold
Feature : Full Brass Health Faucet

MRP :₹ 3300/-

Model : 8501- Chrome
ABS Health Faucet / Brass itting
MRP : ₹ 830/-

Model : 8501-White
ABS Health Faucet / Brass Fitting
MRP : ₹ 780/-

Model : 8501 - Ivory
ABS Health Faucet / Brass Fitting
MRP : ₹ 780/-

Model : 8504 - CP
ABS Health Faucet / Brass Fitting
MRP : ₹ 830/-

Model : 8506
ABS Health Faucet
MRP : ₹ 780/-

Model : 8507- Chrome
ABS Health Faucet
MRP : ₹ 1050/-

Model : 8508
ABS Health Faucet
MRP : ₹ 780/-

Model : 8524- Chrome
ABS Health Faucet
MRP : ₹ 960/-

Model : 8525- Chrome
ABS Health Faucet
MRP : ₹ 1050/-

Model : 8526- Chrome
ABS Health Faucet
MRP : ₹ 1090/-

Only Faucet

Model : 8511- Chrome
ABS Health Faucet
MRP : ₹ 230/-

Only Faucet

Model : 8512- Chrome
ABS Health Faucet
MRP : ₹ 316/-

Model : 2251-Rose Gold
Full Brass Angle Valve
MRP :₹ 1900/-

Model : 2252-Golden
Full Brass Angle Valve
MRP :₹ 1900/-

Model : 2253-Black & Gold
Full Brass Angle Valve
MRP :₹ 1900/-

Model : 2301-CP
Height : 100mm(4")
Full Brass Heavy
MRP : ₹ 1140/-

Model : 2301-White
Height : 100mm(4")
Full Brass Heavy with Ceramic Cap
MRP : ₹ 1140/-

Black Glossy
Black Matt

Model : 2301-Black
Height : 100mm(4")
Full Brass Heavy with Ceramic Cap
MRP : ₹ 1240/-

Model : 2301- Onyx
Height : 100 mm (4")
Full Brass Heavy with Ceramic Cap
MRP : ₹ 1280/-

Model : 2301-Golden
Height : 100mm(4")
Full Brass Heavy
MRP : ₹ 1360/-

Model : 2301-Rose Gold
Height : 100mm(4")
Full Brass Heavy
MRP : ₹ 1360/-

Model : 2307-CP
Height : 140mm(5.5")
Full Brass Heavy
MRP : ₹ 1460/-

Model : 2307- White
Height : 140mm(5.5")
Full Brass Heavy with Ceramic Cap
MRP : ₹ 1460/-

Black Glossy
Black Matt

Model : 2307-Black
Height : 140mm(5.5")
Full Brass Heavy with Ceramic Cap
MRP : ₹ 1560/-

Model : 2307-Onyx
Height : 140mm(5.5")
Full Brass Heavy with Ceramic Cap
MRP : ₹ 1600/-

Model : 2307- Golden
Height : 140mm(5.5")
Full Brass Heavy
MRP : ₹ 1650/-

Model : 2307- Rose Gold
Height : 140mm(5.5")
Full Brass Heavy
MRP : ₹ 1650/-

2 Way

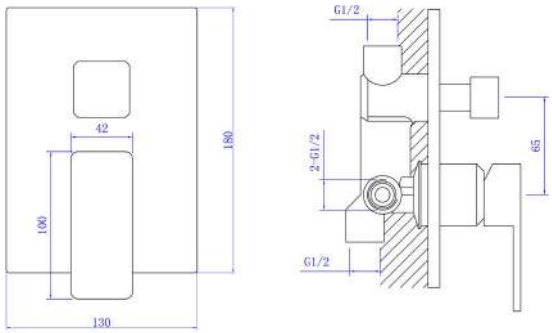

Model : 8902-BG (180 x130 mm)
Color : Black & Golden
Concealed Brass Mixer & Diverter (2 Functions)

MRP :
₹ 16800/-

3 Way

Model : 8903-BG (190 x130 mm)
Color : Black & Golden
Concealed Brass Mixer & Diverter (3 Functions)

MRP :
₹ 22600/-

Model : 8601- Black
Brass Bath Spout

MRP :
₹ 3200/-

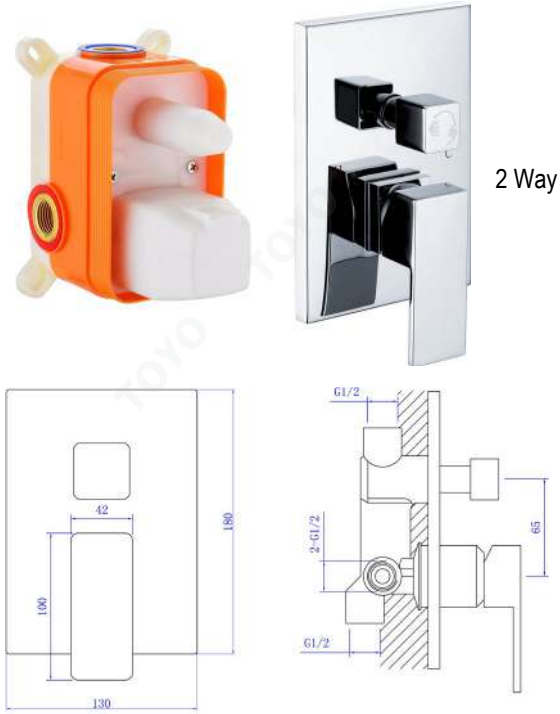

2 Way

Model : 8902-CP (180 x130 mm) Color : Chrome Concealed Brass Mixer & Diverter (2 Functions)	MRP : ₹ 12800/-

3 Way

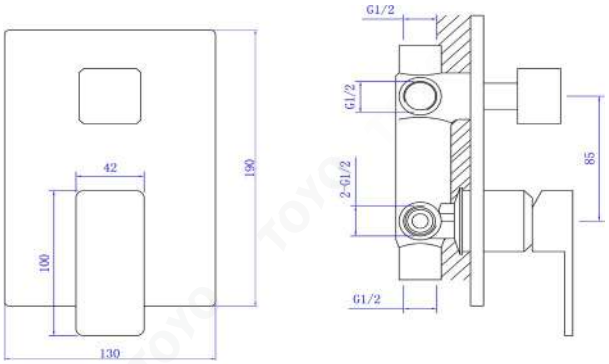

Model : 8903-CP (190 x130 mm) Color : Chrome Concealed Brass Mixer & Diverter (3 Functions)	MRP : ₹ 17200/-

Model : 8601-Chrome Brass Bath Spout	MRP : ₹ 2400/-

Model : 8602-Chrome Brass Bath Spout (Two-Way)	MRP : ₹ 5100/-

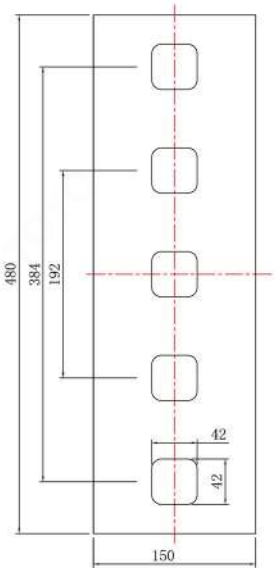

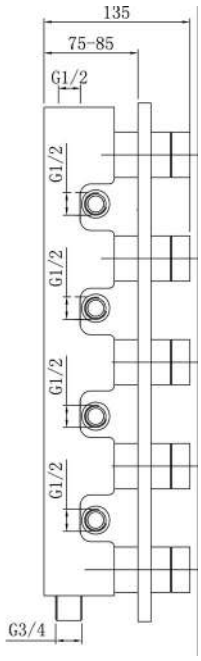

Model : 8905 (480x150 mm) Color : Chrome Concealed Brass Mixer & Diverter (5 Functions)	MRP : ₹ 68500/-

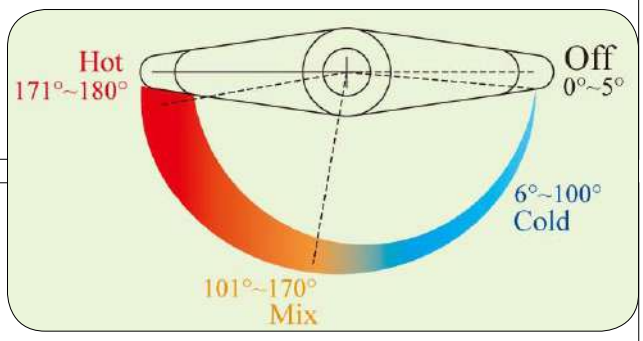

Controller & Mixer Together

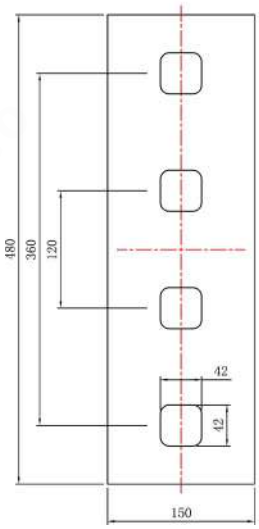

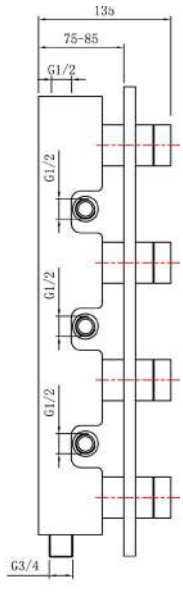

Model : 8904 (480x150 mm) Color : Chrome Concealed Brass Mixer & Diverter (4 Functions)	MRP : ₹ 62200/-

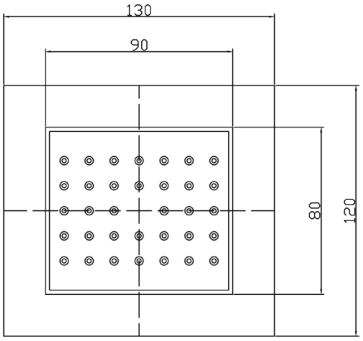

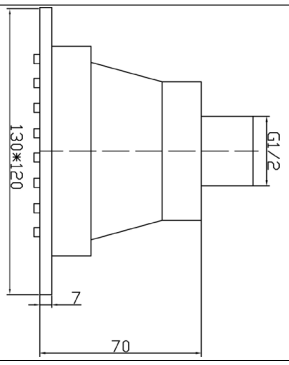

Model : 8701 (120 x120 mm)
Brass Concealed Body Jets (Square)

MRP :
₹ 6600/-

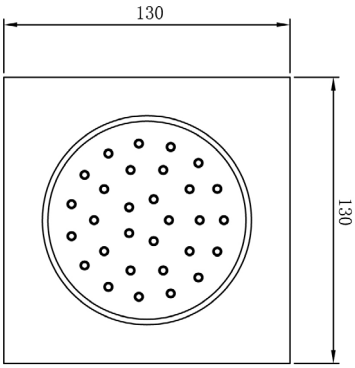

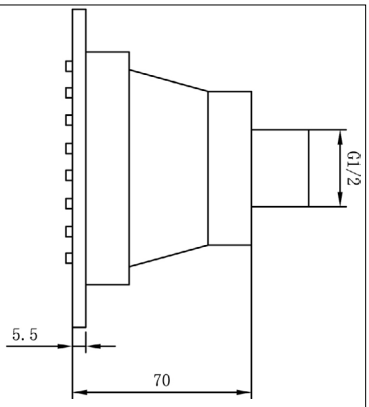

Model : 8702 (130 x130 mm)
Brass Concealed Body Jets

MRP :
₹ 6000/-

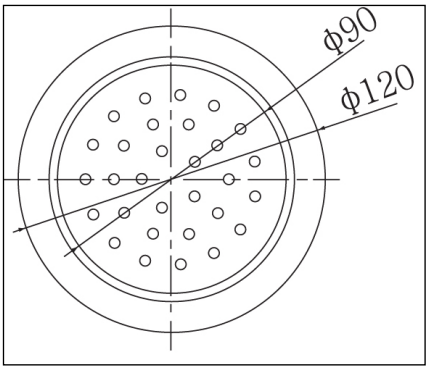

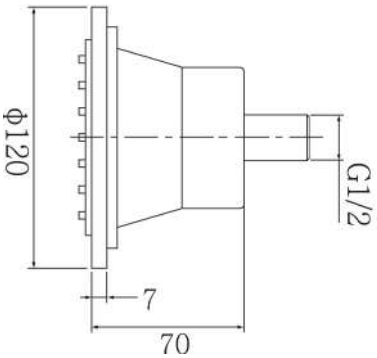

Model : 8703 (120 x120 mm)
Brass Concealed Body Jets (Round)

MRP :
₹ 6000/-

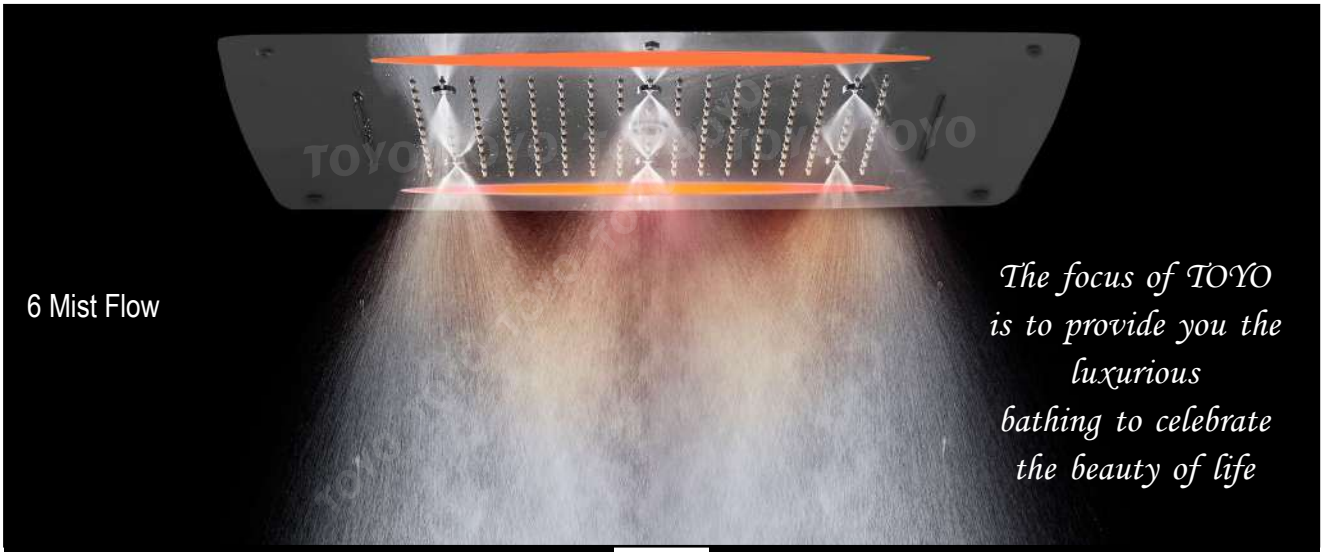

Model : 8011
Color : Chrome
Size : 480 x 700 mm (19" x 28")

Features :
1. Material : SS 304
2. With Lights : Color Changeable
3. With 4 Functions : 2 Water Falls, 6 Mist Jets, Rain Fall & Airator
4. LED By Electricity
5. With Hanging Rods

MRP : ₹ 82000/-

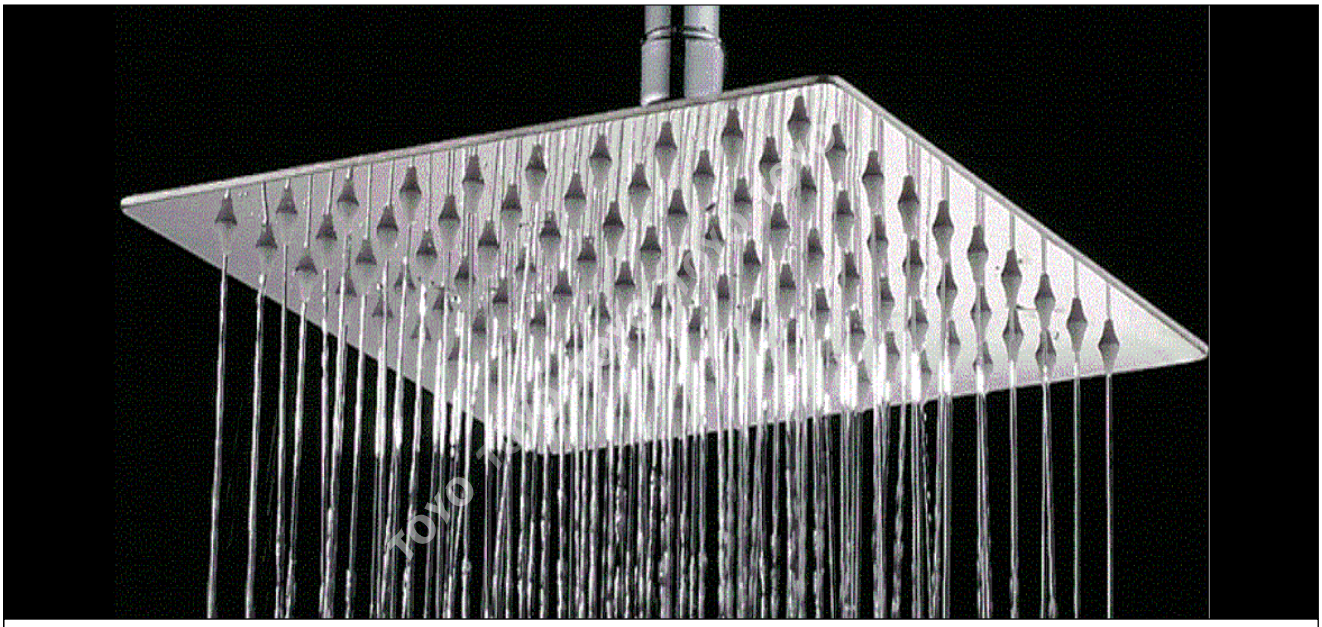

Model	: 83004-1	Model	: 83006-1	Model	: 83008-1	Model	: 83012-1	Model	: 83016-1
Color	: Chrome	Color	: Chrome	Color	: Chrome	Color	: Chrome	Color	: Chrome
Size	: 100 x 100 mm (4" x 4")	Size	: 150 x 150 mm (6" x 6")	Size	: 200 x 200 mm (8" x 8")	Size	: 300 x 300 mm (12" x 12")	Size	: 400 x 400 mm (16" x 16")
MRP	**: ₹ 1180/-**	**MRP**	**: ₹ 1550/-**	**MRP**	**: ₹ 1900/-**	**MRP**	**: ₹ 4150/-**	**MRP**	**: ₹ 8200/-**

Model	: 83008-2	Model	: 83012-2	Model	: 83016-2
Color	: Black	Color	: Black	Color	: Black
Size	: 200 x 200 mm (8" x 8")	Size	: 300 x 300 mm (12" x 12")	Size	: 400 x 400 mm (16" x 16")
MRP	**: ₹ 2980/-**	**MRP**	**: ₹ 5500/-**	**MRP**	**: ₹ 9460/-**

Model : 83001 (12") - LED Rain Shower
Color : Full Chrome
Feature : LED 3 Colors. Color Changeable With Temp. / Temperature Display LCD

MRP : ₹ 8200/-

Model : 83002 (8") - LED Rain Shower
Color : Full Chrome & Grey
Feature : LED 3 Colors. Color Changeable With Temp.

MRP : ₹ 6400/-

Model : 84001 - LED Hand Shower
Color : Full Chrome
Feature : LED 3 Colors. Color Changeable With Temp. / Temperatur Display LCD

MRP : ₹ 5500/-

Model : TOYO- 8355
Colour : Full Chrome

Feature : ABS Rain Shower (2 in 1) / Dancing Flow / Saturating Flow

MRP : ₹ 2600

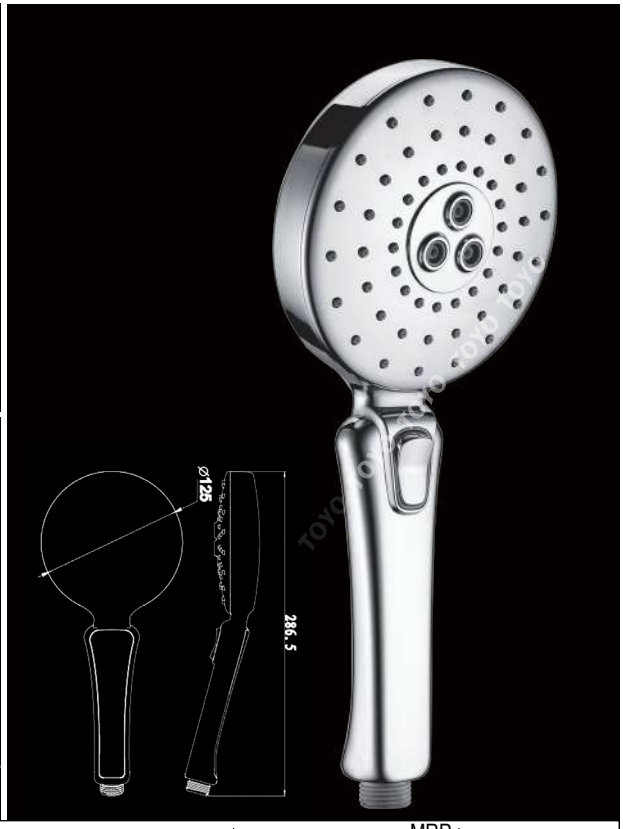

Model : TOYO- 8455
Colour : Full Chrome

Feature : ABS Hand Shower (2 in 1) Dancing Flow / Saturating Flow / Easy Flow Change Switch

MRP :
8455-1(Only HS) : ₹ 2800/-
8455-2 (HS Set) : ₹ 3400/-

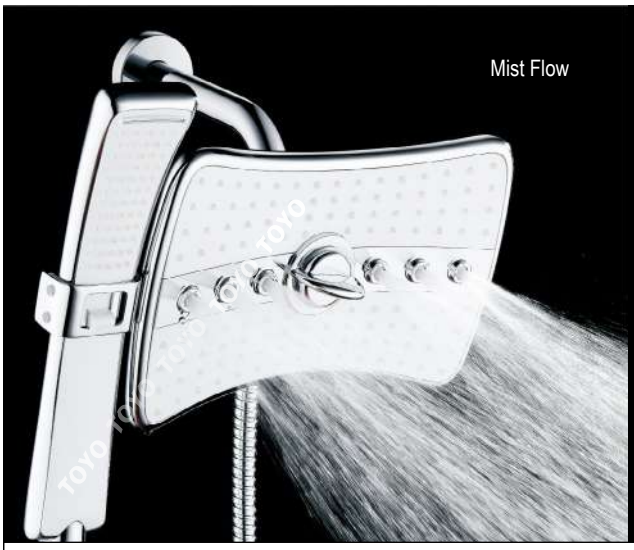

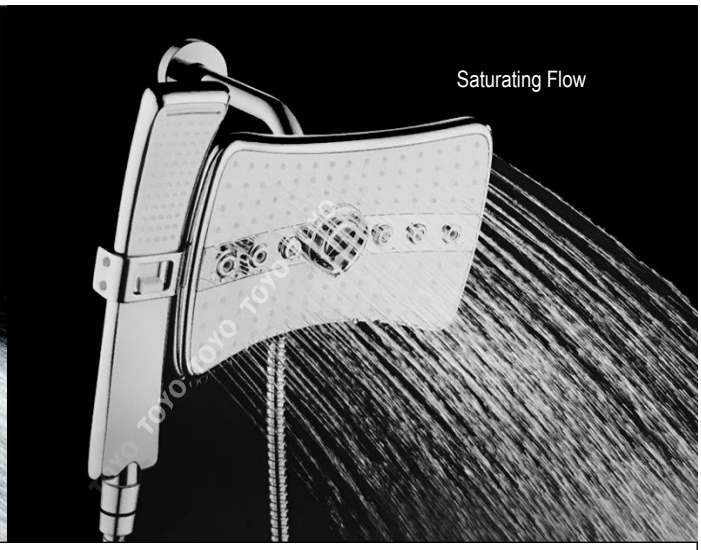

Model : TOYO- RS - 8356

Features : ABS Rain Shower
2 Funtions-Mist Flow & Saturating Flow
Easy Flow Change Controller

MRP : ₹ 4600

Model : TOYO- HS 8456

Features : ABS Hand Shower
2 Functions- Water Fall & Saturating Flow
Easy Flow Change Controller

MRP :
8456-1(Only HS) : ₹ 1350/-
8456-2 (HS Set) : ₹ 1950/-

Model : TOYO- HS 2260

Features : ABS Hand Shower
Twiatable Head for Flow Change (2 Flow)
Mist Flow & Saturating Flow.

MRP :
2260-1(Only HS) : ₹ 2100/-
2260-2 (HS Set) : ₹ 2700/-

Air Pressurization Technology

Shower head with adoption of innovative air injection technology mixes water with air to increase the water pressure to 100% & stimulates the natural raining, saves upto 30% on water at the same time, which is a perfect solution for areas with low water pressure.

Model : **8347-6"** | Model : **8347-8"**
Color : Full Chrome with White Beading
Feature : Heavy SS 304 Rain Shower with Water Saving Function & Air Generating Switch

MRP :
8347-6" : ₹ 5600/-
8347-8" : ₹ 6400/-

Model : **8447**-Hand Shower
Color : Full Chrome with White Beading
Feature : Sleek SS 304 Hand Shower

MRP : ₹ 2400/-

MRP : ₹ 4200

MRP :
8446-1 : ₹ 2800/-
8446-2 : ₹ 3400/-

Model : **8346**
Size : 300 mm x 200 mm (12" x 8")
Color : Full Chrome
Feature : ABS Rain Shower / Tapered Edge Design

Model : **8446-1** (Only Hand Shower)
Model : **8446-2** (Hand Shower Set with Shower Hose & Hook)
Color : Chrome
Feature : ABS Rain Shower with 6 Function (3 Main Function & 3 Mixture Funtions)

Model : **OHS 8330**
Color : Full Chrome
Feature : 4 Flow
MRP : ₹ 1080

Model : **HS 8430-1** (Only HS) **MRP : ₹ 1080**
Model : **HS 8430-2** (HS Set) **MRP : ₹ 1680**
Color : Full Chrome
Feature : 4 Flow

Model : **RS- 8332**
Color : Wh. & CP
Feature : 2 Flow
MRP : ₹ 2100

Model : **HS 8432-1** (Only HS) **MRP : ₹ 920**
Model : **HS 8432-2** (HS Set) **MRP : ₹ 1520**
Color : White & Chrome
Feature : 2 Flow

SELF CLEANABLE

Model : **OHS 8336**
Color : Grey & Chrome
Feature : 4 Flow / Auto Cleanable
MRP : ₹ 760

Model : **HS 8436-1** (Only HS) **MRP : ₹ 760**
Model : **HS 8436-2** (HS Set) **MRP : ₹ 1360**
Color : Grey & Chrome
Feature : 4 Flow / Self Cleanable

Model : **OHS 8437**
Color : Full Chrome
Feature : 3 Flow / Brass Nut
MRP : ₹ 1230

Model : **HS 8437-1** (Only HS) **MRP : ₹ 1230**
Model : **HS 8437-2** (HS Set) **MRP : ₹ 1830**
Color : Full Chrome
Feature : 3 Flow

SELF CLEANABLE

Model : **RS - 8341- Big**
Size : 200 x 240 mm (8" x 9.5")
Color : Black & Golden
Feature : Auto Cleanable
MRP : ₹ 2100

SELF CLEANABLE

Model : **RS - 8341- Small**
Size : 150 x 200 mm (6" x 8")
Color : Black & Golden
Feature : Auto Cleanable
MRP : ₹ 1500

SELF CLEANABLE

Model : **HS - 8441**
Color : Black & Golden
Feature : Auto Cleanable
MRP : ₹960

Model : **HS 8438-1**-wh. (Only Hand Shower) | **MRP : ₹ 520**
Model : **HS 8438-2**-wh. (Hand Shower Set) | **MRP : ₹ 1120**
Color : White & Chrome / Black & Chrome

Model : **HS 8435-1** (Only Hand Shower) | **MRP : ₹ 760**
Model : **HS 8435-2** (Hand Shower Set) | **MRP : ₹ 1360**
Feature : 4 Flow

Model : **HS 8443-1** (Only Hand Shower) | **MRP : ₹ 730**
Model : **HS 8443-2** (Hand Shower Set) | **MRP : ₹ 1330**
Color : Full Chrome
Feature : ABS Hand Shower (2 in 1)

Model : **8444**
Color : Black
Features : ABS Hand Shower (3 Flow) / Special Designed Twistable Head for Flow Change

MRP : ₹ 730/-

Model : **HS - 8445**
Color : Black
Features : ABS Hand Shower (2 in 1)

MRP : ₹ 730/-

Model : HS 8453-1 (Only Hand Shower)
Color : Black & Gold
Feature : Brass Hand Shower (2 in 1)

MRP : ₹ 1720/-

Model Name : Solution Hand | Model Name : Solution Head

Model : **HS 8491-1** (Only HS) | **MRP : ₹1320**
Model : **HS 8491-2** (HS Set) | **MRP : ₹ 1920**
Feature : 5 Flow

Model No : **OHS - 8391**
Features : 5 Flow
MRP : ₹ 1320/-

Model Name : Trump Hand | Model Name : Trump Head

Model : **HS 8492-1** (Only HS) | **MRP : ₹ 790**
Model : **HS 8492-2** (HS Set) | **MRP : ₹ 1390**
Feature : 5 Flow

Model No : **OHS - 8392**
Features : 5 Flow
MRP : ₹ 790/-

Model Name : Mask Hand | Model Name : Mask Head

Model : **HS 8493-1** (Only HS) | **MRP : ₹1250**
Model : **HS 8493-2** (HS Set) | **MRP : ₹ 1850**
Feature : 5 Flow

Model No : **OHS -8393**
Features : 5 Flow
MRP : ₹ 1250/-

Model Name : Compass Hand | Model Name : Compass Head

Model : **HS 8494-1** (Only HS) | **MRP : ₹ 1250**
Model : **HS 8494-2** (HS Set) | **MRP : ₹ 1850**
Feature : 5 Flow

Model No : **OHS - 8394**
Features : 5 Flow
MRP : 1250/-

Model Name : Legend Hand | Model Name : Legend Head

Model : **HS 8495-1** (Only HS) **MRP : ₹ 900**
Model : **HS 8495-2** (HS Set) **MRP : ₹ 1500**
Feature : 5 Flow

Model No : **OHS - 8395**
Features : **5 Flow**
MRP : ₹ 900/-

Model Name : Dop Hand | Model Name : Dop Head

Model : **HS 8496-1** (Only HS) **MRP : ₹ 900**
Model : **HS 8496-2** (HS Set) **MRP : ₹ 1500**
Feature : 5 Flow

Model No : **OHS - 8396**
Features : 5 Flow
MRP : ₹ 900/-

Model Name : Mist - 6S

Model No : **8371**
Size : 15 x 15 cm (6")
Feature : Mist Shower

MRP : ₹ 800/-

Model Name : Mist - 6R

Model No : **8372**
Size : 15 x 15 cm (6")

MRP : ₹ 760/-

Ultra Slim

Model Name : UFO - 6L

Model No : **8373**
Size : 15 x 15 cm (6")

MRP : ₹ 800/-

Model Name : Epic

Model No : **8374**
Size : 14 x 14 cm (5.5")

MRP : ₹ 1050/-

Model Name : Solo

Model No : **8375**
Size : 12 x 12 cm (5")

MRP : ₹ 1020/-

Model Name : UFO - 6

Model No : **8376**
Size : 15 x 15 cm (6")
Feature : Ultra Slim

MRP : ₹ 800/-

Model Name : Axor

Model No : **8377**
Size : 14 x 14 cm (5.5")
Feature : Jumping Mist Shower

MRP : ₹ 1050/-

Model Name : Flora

Model No : **8378**
Size : 12 x 12 cm (5")
Feature : Jumping Mist Shower

MRP : ₹ 1020/-

Model Name : Pudin

Model No : **8379**
Size : 10 x 10 cm (4")

MRP : ₹ 600/-

Model Name : Mist - 5S

Model No : **8380**
Size : 12 x 12 cm (5")

MRP : ₹ 800/-

Model Name : Mist - 5R

Model No : **8381**
Size : 12 x 12 cm (5")

MRP : ₹ 750/-

Model Name : Mist - REC

Model No : **8382**
Size : 12 x 10 cm (5" x 4")

MRP : ₹ 800/-

TOYO
SANITARY WARES

Shower Panels

Artistic perfection and practical combination of a royal bathing experience

Model : TOYO 7122
Size : 1650 X 220 X 70 mm
Color : Rose Gold Mirror Finish

MRP : ₹ 38900/-

Features :

- Single Piece SS 304 Panel
- 5 Functions
- Separate Controller for Each Function
- Water Fall & Rain Shower
- 8 Adjustable Body Jets
- Brass Spout with Flexible Aerator
- Hand Shower
- Temperature Display
- Single Lever Mixer

Model : TOYO 7125
Size : 1550 x 220 x 70 mm
Color : SS Brushed Matt Finish

MRP : ₹ 27100/-

Features :

- Single Piece SS 304 Panel
- 4 Functions - 4 Way Diverter
- Rain Shower
- 6 Adjustable Body Jets
- Brass Spout with Flexible Aerator
- Hand Shower
- Single Lever Mixer

Model : TOYO 7126
Size : 1450 x 200 x 70 mm
Color : SS Brushed Matt Finish

MRP : ₹ 23500/-

Features :

- Single Piece SS 304 Panel
- 4 Functions - 4 Way Diverter
- Rain Shower
- Inbuilt Body Jets
- Brass Spout with Flexible Aerator
- Hand Shower
- Single Lever Mixer

Model : TOYO 7127
Size : 1550 x 220 x 70 mm
Color : Rose Gold Mirror Finish

MRP : ₹ 29900/-

Features :

- Single Piece SS 304 Panel
- 5 Functions- 5 Way Diverter
- Rain Shower & Water Fall
- 6 Adjustable Body Jets
- Brass Spout wih Flexible Aerator
- Hand Shower
- SS 304 Shelf
- Single Lever Mixer

Model : TOYO 7128
Size : 1550 x 220 x 70 mm
Color : Dark Grey Mirror Finish

MRP : ₹ 29900/-

Features :
- Single Piece SS 304 Panel
- 5 Functions- 5 Way Diverter
- Rain Shower & Water Fall
- 6 Adjustable Body Jets
- Brass Spout wih Flexible Aerator
- Hand Shower
- SS 304 Shelf
- Single Lever Mixer

Model : TOYO 7129
Size : 1550 x 220 x 70 mm
Color : SS Brushed Matt Finish

MRP : ₹ 35200/-

Features :
- Single Piece SS 304 Panel
- 5 Functions
- Seprate Controller for each function
- Rain Shower & Water Fall
- Inbuilt Body Jets
- Brass Spout wih Flexible Aerator
- Hand Shower
- Single Lever Mixer

Model : TOYO 7129-B
Size : 1550 x 220 x 70 mm
Color : Mirror Finish Chrome

MRP : ₹ 36100/-

Features :

- Single Piece SS 304 Panel
- 5 Functions
- Seprate Controller for each function
- Rain Shower & Water Fall
- Inbuilt Body Jets
- Brass Spout wih Flexible Aerator
- Hand Shower
- Single Lever Mixer

DISCONTINUED

Model : TOYO 7130
Size : 1550 x 220 x 70 mm
Color : Dark Grey Mirror Finish

MRP : ₹ 36100/-

Features :

- Single Piece SS 304 Panel
- 5 Functions
- Seprate Controller for each function
- Rain Shower & Water Fall
- Inbuilt Body Jets
- Brass Spout wih Flexible Aerator
- Hand Shower
- Single Lever Mixer

Model : TOYO 7131
Size : 1550 x 220 x 70 mm
Color : SS Brushed Matt Finish

MRP : ₹ 29900/-

Features :

- Single Piece SS 304 Panel
- 5 Functions- 5 Way Diverter
- Rain Shower & Water Fall
- 2 Square Adjustable Body Jets
- Brass Spout wih Flexible Aerator
- Hand Shower
- SS 304 Shelf
- Single Lever Mixer

Model : TOYO 7134
Size : 1550 x 220 x 70 mm
Color : Brushed Black Matt Finish

MRP : ₹ 29900/-

Features :

- Single Piece SS 304 Panel
- 5 Functions- 5 Way Diverter
- Rain Shower & Water Fall
- 3 Round Adjustable Body Jets
- Brass Spout wih Flexible Aerator
- Hand Shower
- SS 304 Shelf
- Single Lever Mixer

Model : TOYO 7135
Size : 1550 x 220 x 70 mm
Color : Brushed Black Matt Finish

MRP : ₹ 36100/-

Features :

- Single Piece SS 304 Panel
- 5 Functions
- Seprate Controller for each function
- Rain Shower & Water Fall
- 3 Square Adjustable Body Jets
- Brass Spout wih Flexible Aerator
- Hand Shower
- Single Lever Mixer

Model : TOYO 7136-G
Size : 1550 x 220 x 70 mm
Color : Golden Mirror Finish

MRP : ₹ 39700/-

Features :

- Single Piece SS 304 Panel
- 6 Functions
- 2 Controllers (3 Functions Each)
- Water Fall & Rain Shower
- 2 Large Body Jets & 4 Mist Jets
- Brass Spout wih Flexible Aerator
- Hand Shower
- Single Lever Mixer
- LED Light / Temperature Display

Model : TOYO 7136-C
Size : 1550 x 220 x 70 mm
Color : Rose Gold Mirror Finish

Features :
- Single Piece SS 304 Panel
- 6 Functions
- 2 Controllers (3 Functions Each)
- Water Fall & Rain Shower
- 2 Large Body Jets & 4 Mist Jets
- Brass Spout wih Flexible Aerator
- Hand Shower
- Single Lever Mixer
- LED Light / Temperature Display

MRP : ₹ 39700/-

Air Pressurization Technology

Shower head with adoption of innovative air injection technology mixes water with air to increase the water pressure to 100% & stimulates the natural raining, saves upto 30% on water at the same time, which is a perfect solution for areas with low water pressure.

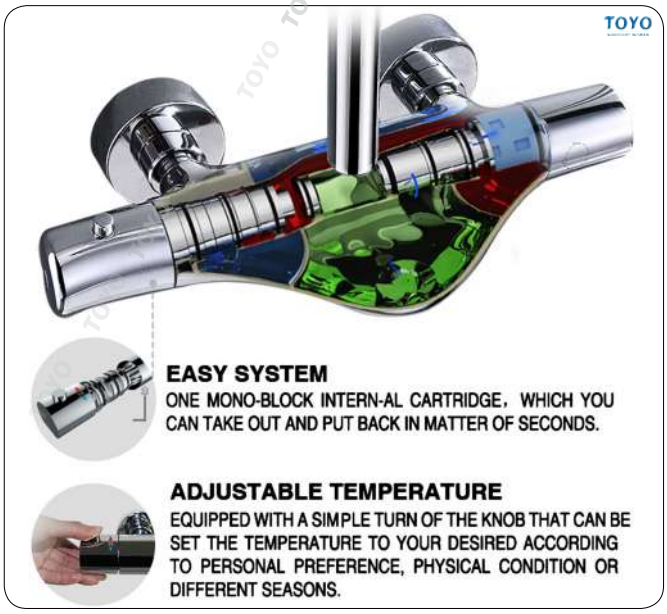

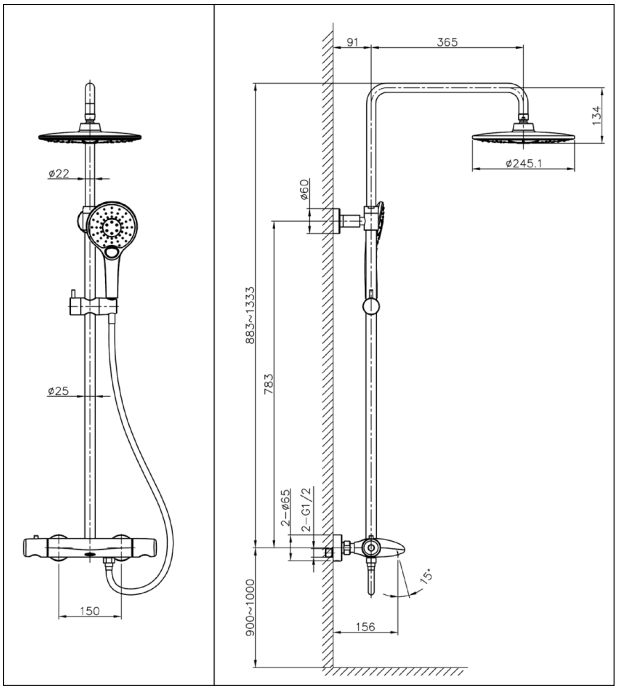

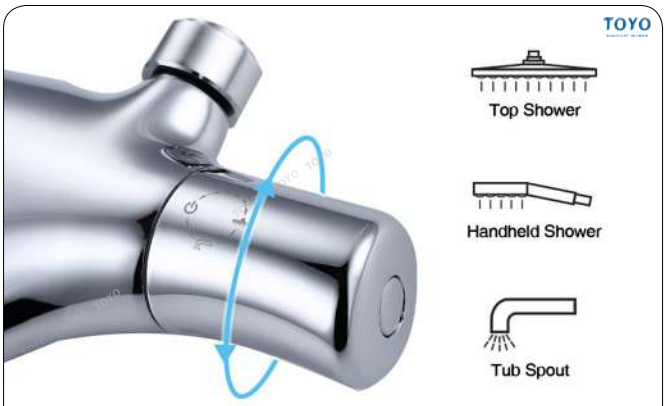

THREE FUNCTION

Consider humanization design from all aspects, adjust different water outlets according to your personal preferences and habits, experience the best shower effect.

Model : 7172 (Thermostatic) Color : Chrome Feature : Full Brass / ABS Showers / French Technology		MRP : ₹ 56000/-

Model :16010
Full BrassTowel Rack
MRP : ₹ 13200/-

Model :16009
Full BrassTowel Rod
MRP : ₹ 6000/-

Model : 8571
Full Brass Health Faucet
MRP : ₹ 3800

Model :16011
Toilet Brush Holder
MRP : ₹ 5400/-

Model : 16007
Full BrassTowel Ring
MRP : ₹ 3500/-

Model : 2271
Full Brass Angle Valve
MRP : ₹ 1540/-

Model :16002
Tumbler Holder
MRP : ₹ 3600/-

Model : 16005
Full Brass Soap Basket
MRP : ₹ 3700/-

Model : 1071 | MRP :₹ 12300/-
Full Brass Single Lever Basin Mixer

Model : 7171- Wall Mixer with Shower Set | MRP : ₹ 48700/-
Color : Antique Brass
Feature : Full Brass / Brass Rain Shower & Hand Shower

Model :16001
Full Brass Robe Hook
MRP : ₹ 1840/-

Model : 2371
Full Brass Pop up Waste Coupling
MRP : ₹ 2400/-

Model : 1051-12"
MRP : ₹ 8840/-

Model : 1051-8"
MRP : ₹ 7840/-

Model : 8551
MRP : ₹ 3300/-

Model : 2251
MRP : ₹ 1900/-

Model : 7151- Wall Mixer with Shower Set
Color : ORB
Feature : Full Brass / SS Showers

MRP : ₹ 44200/-

Model : 1052-12
MRP : ₹ 8660/-

Model : 1052-8"
MRP : ₹ 7660/-

Model : 8503-G
MRP : ₹ 3300/-

Model : 2252
MRP : ₹ 1900/-

Model : 7152 - Wall Mixer with Shower Set
Color : Golden
Feature : Full Brass / SS Showers

MRP : ₹ 36100/-

Model : 1053-8"
MRP : ₹ 7300/-

Model : 8503-BG
MRP : ₹ 3300/-

Model : 2253
MRP : ₹ 1900/-

Model : 7153 - Wall Mixer with Shower Set
Color : Black & Gold
Feature : Full Brass / ABS Showers

MRP : ₹ 35200/-

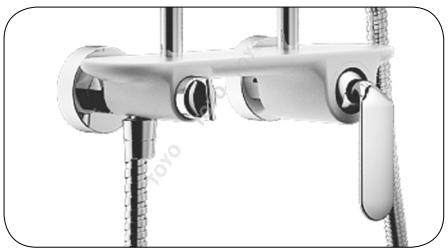

Model : 7154 - Italian Shower Set
Color : Chrome
Feature : Additional Mist Flow / Mulitifuncition HS / Rain Shower

MRP : ₹ 34400/-

The focus of TOYO is you and
the purpose is celebrating the beauty of life

SS / PVC Mirror Cabinets

Model : 2540
Size : 250 X 400 mm (10" x 16")
Features : High Gloss Stailnless Steel / Double Coated Silver Mirror

MRP : ₹ 6400/-

Model : 3550
Size : 350 x 500 mm (14" x 20")
Features : High Gloss Stailnless Steel / Double Coated Silver Mirror / 2 Brush Shelves

MRP : ₹ 8200/-

Model : 3550-SL
Size : 350 x 500 mm (14" x 20")
Features : High Gloss Stailnless Steel / Double Coated Silver Mirror / Sliding Door / 2 Brush Shelves

MRP : ₹ 8400/-

Model : 3550-B
Size : 350 X 500 mm (14"X 20")
Feature : High Gloss Stailnless Steel / Designer Glass Door / 2 Brush Shelves

MRP : ₹ 8200/-

Model : 4060
Size : 400 X 600 mm (16" x 24")
Features : High Gloss Stailnless Steel / Double Coated Silver Mirror / 2 Brush Shelves

MRP : ₹ 9600/-

Model : 4560-C2
Size : 450 X 600 mm (18" x 24")
Features : High Gloss Stailnless Steel / Designer Glass Door / 2 Brush Shelves

MRP : ₹ 10900/-

Model : 4560
Size : 450 X 600 mm (18" x 24")
Features : High Gloss Stailnless Steel / Double Coated Silver Mirror / 2 Brush Shelves

MRP : ₹ 10900/-

Model : 4560-SL
Size : 450 X 600 mm (18" x 24")
Features : High Gloss Stailnless Steel / Double Coated Silver Mirror / Sliding Door / 2 Brush Shelves

MRP : ₹ 11100/-

Model : 3550-F
Size : 350 x 500 mm (14" x 20")
Features : High Gloss Stailnless Steel / Double Coated Silver Mirror / 2 Brush Shelves

MRP : ₹ 9100/-

Model : 3545-F
Size : 350 X 550 mm (14" x 22")
Features : High Gloss Stailnless Steel / Double Coated Silver Mirror / 2 Brush Shelves

MRP : ₹ 9200/-

Model : 6050-F (Double Door)
Size : 600 X 550 mm (24" x 22")
Features : High Gloss Stailnless Steel / Double Coated Silver Mirror / 2 Brush Shelves

MRP : ₹ 14500/-

Model : LED 3545-F
Size : 350 X 550 mm (14" X 22")
Features : High Gloss Stailnless Steel / Double Coated Silver Mirror / 2 Brush Shelves / LED

MRP : ₹ 15000/-

Model : 3060-C (Corner)
Size : 300 X 600 mm (12" x 24")
Features : High Gloss Stailnless Steel / Double Coated Silver Mirror / 2 Brush Shelves

MRP : ₹ 10000/-

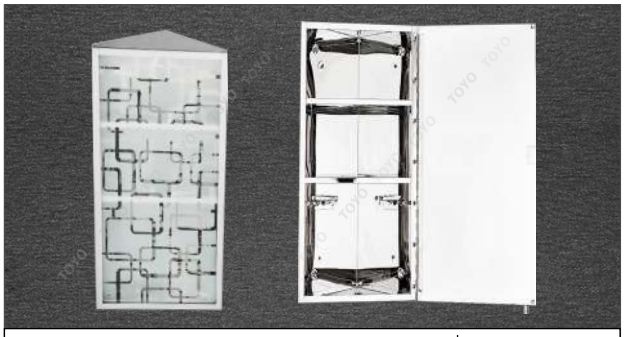

Model : 3060-C2 (Corner)
Size : 300 x 600 mm (12" X 24")
Features : High Gloss Stailnless Steel / Designer Glass Door / 2 Brush Shelves

MRP : ₹ 10000/-

Model : 2581-A
Size : 250 X 810 mm (10" X 32")
Features : High Gloss Stailnless Steel / Designer Glass Door / 2 Brush Shelves

MRP : ₹ 10000/-

Model : 2581-B
Size : 250 X 810 mm (10" x 32")
Features : High Gloss Stailnless Steel / Designer Glass Door / 2 Brush Shelves

MRP : ₹ 10000/-

Model : PVC-4560 (White / Brown)
Size : 450 X 600 mm (18" x 24")
Features : 15 mm High Density PVC Cabinet / Double Coated Silver Mirror / SS 304 Soft Close Hinges

MRP : ₹ 8200/-

Model : PVC-3853 (White / Brown)
Size : 380 X 530 mm (15" x 21")
Features : 15 mm High Density PVC Cabinet / Double Coated Silver Mirror / SS 304 Soft Close Hinges

MRP : ₹ 7400/-

Model : PVC -1030
Color : Full White
Size : 250 X 760 mm (10" x 30")

MRP : ₹ 5800/-

Model : PVC -1030
Color : White & Black
Size : 250 X 760 mm (10" x 30")

MRP : ₹ 5800/-

Model : PVC -1030
Color : Full Brown
Size : 250 X 760 mm (10" x 30")

MRP : ₹ 5800/-

Model : PVC -1030
Color : Ivory Brown
Size : 250 X 760 mm (10"x 30")

MRP : ₹ 5800/-

Common Features : 15 mm High Density PVC Cabinet / SS 304 Soft Close Hinges

Silver Mirror With PVC Frame
Model : 9802 - White
Size : 525 X 675 mm (21" x 27")

MRP : ₹ 3300/-

Silver Mirror With PVC Frame
Model : 9802 - Black
Size : 525 X 675 mm (21" x 27")

MRP : ₹ 3300/-

Silver Mirror With PVC Frame
Model : 9802 - Brown
Size : 525 X 675 mm (21" x 27")

MRP : ₹ 3300/-

Silver Mirror with Glass Strips

Model : 9018-Black
Size : 450 x 600 mm (18" x 24")
MRP : ₹ 1720/-

Silver Mirror with Glass Strips

Model : 9018-Red
Size : 450 x 600 mm (18" x 24")
MRP : ₹ 1720/-

Silver Mirror with Glass Strips

Model : 9018-White
Size : 450 x 600 mm (18" x 24")
MRP : ₹ 1720/-

Thickness : 5 mm

Silver Mirror with Frost Design

Model : 9211-Big
Size : 400 x 600 mm (16" x 24")
MRP : ₹ 1280/-

Thickness : 5 mm

Silver Mirror With Frost Design

Model : 9212-Big
Size : 400 x 600 mm (16" x 24")
MRP : ₹ 1280/-

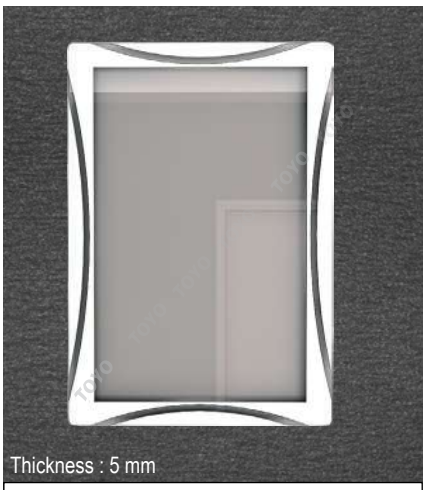

Thickness : 5 mm

Silver Mirror with Frost Design

Model : 9213-Big
Size : 400 x 600 mm (16" x 24")
MRP : ₹ 1280/-

Thickness : 5 mm

Silver Mirror with Frost Design

Model : 9214-Big
Size : 400 x 600 mm (16" x 24")
MRP : ₹ 1280/-

Thickness : 5 mm

Silver Mirror with Frost Design

Model : 9215-Big
Size : 400 x 600 mm (16" x 24")
MRP : ₹ 1280/-

Thickness : 5 mm

Silver Mirror with Frost Design

Model : 9216-Big
Size : 400 x 600 mm (16" x 24")
MRP : ₹ 1280/-

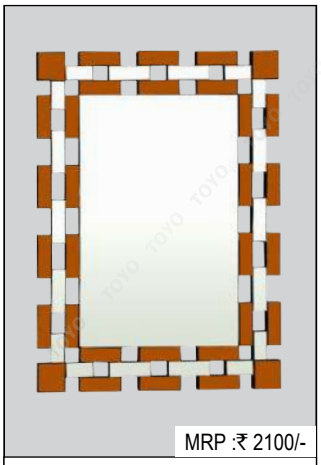

MRP :₹ 2100/-

Model : TOYO 9301
Size : 450x600 mm (18" x 24")
Color : Rose Gold & Silver

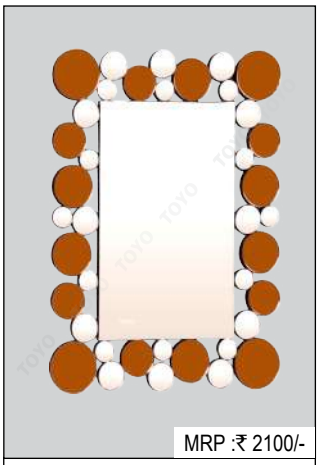

MRP :₹ 2100/-

Model : TOYO 9302
Size : 450x600 mm (18" x 24")
Color : Rose Gold & Silver

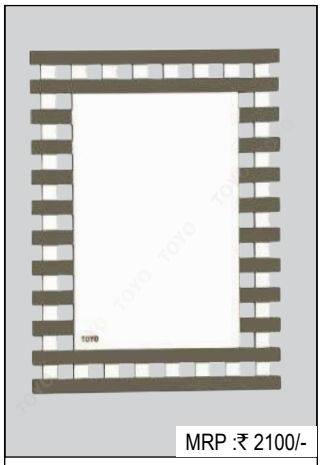

MRP :₹ 2100/-

Model : TOYO 9303
Size : 450x600mm (18" x 24")
Color : Grey & Silver

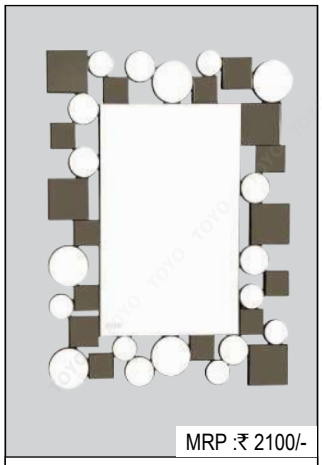

MRP :₹ 2100/-

Model : TOYO 9304
Size : 450x600mm (18" x 24")
Color : Grey & Silver

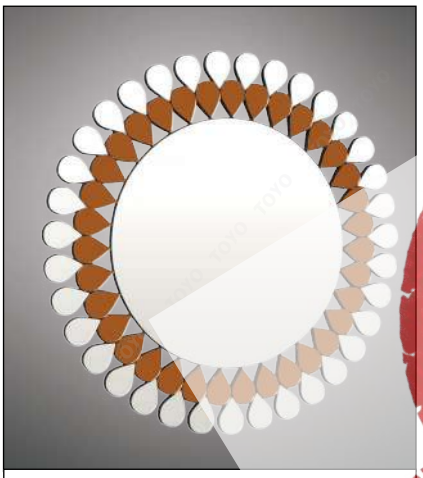

Model : TOYO 9311
Size : 750 x 750 mm (30" x 30")
Color : Rose Gold & Silver

MRP : ₹ 4800/-

Model : TOYO 9312
Size : 750 x 750 mm (30" x 30")
Color : Rose Gold & Silver

MRP : ₹ 4800/-

Model : TOYO 9313
Size : 750 x 750 mm (30" x 30")
Color : Rose Gold & Silver

MRP : ₹ 4800/-

DISCONTINUED

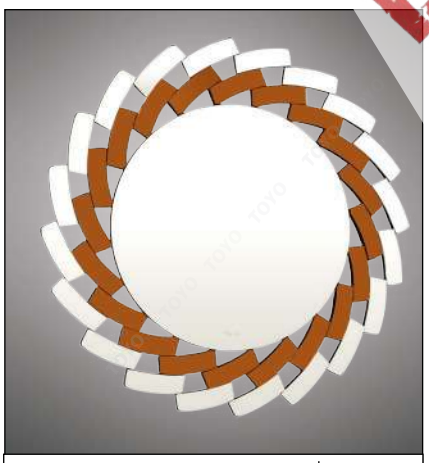

Model : TOYO 9314
Size : 750 x 750 mm (30" x 30")
Color : Rose Gold & Silver

MRP : ₹ 4800/-

Model : TOYO 9315
Size : 750 x 750 mm (30" x 30")
Color : Silver

MRP : ₹ 4800/-

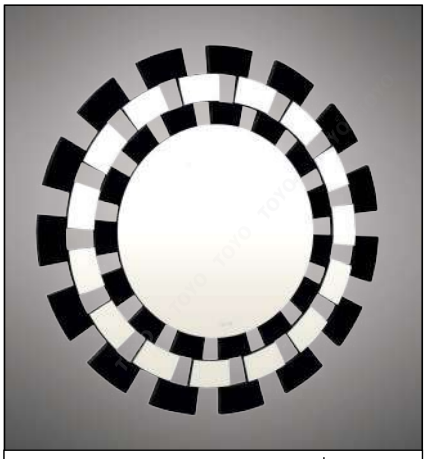

Model : TOYO 9316
Size : 750 x 750 mm (30" x 30")
Color : Black & Silver

MRP : ₹ 4800/-

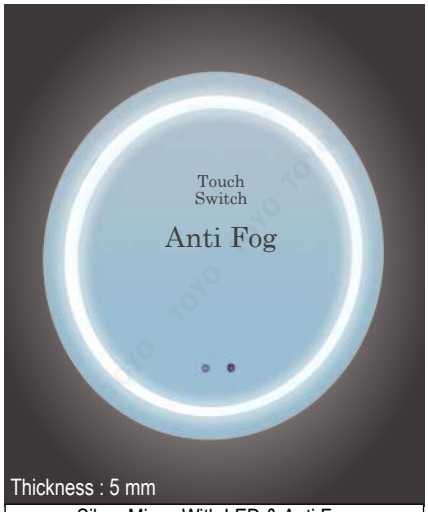

Thickness : 5 mm

Silver Mirror With LED & Anti Fog

Model : 9021
Size : 800 X 800 mm (32" x 32")

MRP : ₹ 11440/-

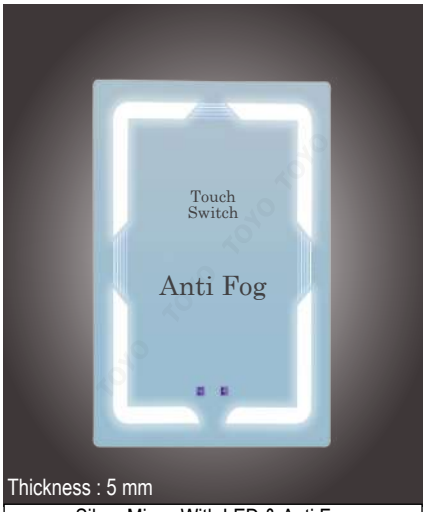

Thickness : 5 mm

Silver Mirror With LED & Anti Fog

Model : 9022
Size : 800 X 600 mm (32" x 24")

MRP : ₹ 11440/-

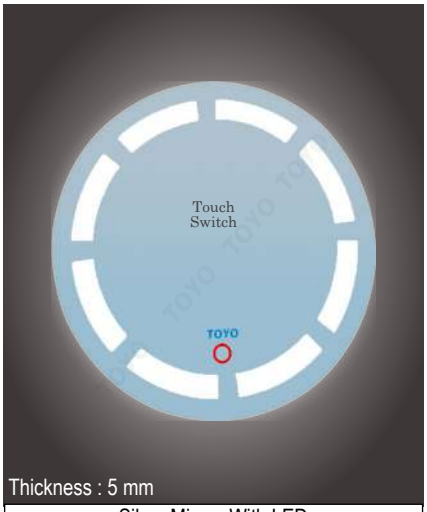

Thickness : 5 mm

Silver Mirror With LED

Model : 9006
Size : 600 X 600 mm (24" x 24")

MRP : ₹ 5600/-

Thickness : 5 mm

Silver Mirror With LED

Model : 9009
Size : 500 X 700 mm (20" x 28")

MRP : ₹ 5600/-

Thickness : 5 mm

Silver Mirror With LED

Model : 9014
Size : 500 X 700 mm (20" x 28")

MRP : ₹ 5600/-

Thickness : 5 mm

Silver Mirror With LED

Model : 9016
Size : 500 X 700 mm (20" x 28")

MRP : ₹ 5600/-

Silver Mirror With SS Frame
Model : 9131 - Black
Size : 600 X 800 mm (24" x 32")

MRP : ₹ 3200/-

Silver Mirror With SS Frame
Model : 9131- Silver
Size : 600 X 800 mm (24" x 32")

MRP : ₹ 3200/-

Mirror With Brass Frame & Stand
Model : 9502, Magnifying
Size : 8"

MRP : ₹ 3700/-

Sensor Products

TOYO designs are an outcome of research, creativity and functionality

Brushless Motor

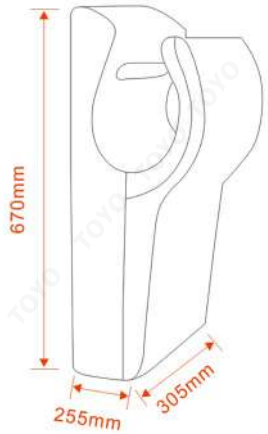

MRP : ₹ 76000/-

Item No	Voltage	Frequency	Power	Motor	Air Speed	Waterproof	Drying time	Weight
TOYO-1331	110V-240V	50Hz-60Hz	900+900PTC	Brushless	102m/s	IPX4	7 Seconds	12KG
Product size:670*305*255mm				Packing size:750*385*320mm(1pcs)				

1 .Equipped with digital brush motor 35000 RPM

2.High grade HEPA Filter reduce bacteria from air

3.Big Drying Area

4.Intelligent sensor,which informs you when it's need to be emptied.

5..Stainless steel baseboard lifetime are longer than plastic

6.12V low voltage intelligent switch -choose warm/cold air ,ON&OFF in one button.

7.Overload, Overheat,Over current protection .

8. Brushless PCB Requires Higher Electronic Components & Mostly Electronic Components are from Germany.

Brushless Motor

MRP : ₹ 66000/-

Item No	Voltage	Frequency	Power	Motor	Air Speed	Waterproof	Drying time	Weight
TOYO-1332	110V-240V	50Hz-60Hz	750+900PTC	Brushless	100m/s	IPX4	7 Seconds	11KG
Product size:300*220*687mm				Packing size:360*282*760mm(1pcs)				

Spec:

1. Equipped with digital brushless motor 22000 RPM(Produced by equipment)

2. 12V low voltage intelligent switch -choose warm/cold air ,ON&OFF,air speed adjust in one button

3.Blue LED Light .to be easily use in dark.

4. Hi/Low voltage isolator in PCB

5. overheat overload over current protection

6. Brushless PCB Requires Higher Electronic Components & Mostly Electronic Components are from Germany.

MRP : ₹ 23000/-

Model	1322 • High Speed
Material	SS304 Mirror Finish
Size	W295xD171xH325 mm
Power	1800 Watt
Voltage	220V (50Hz-60Hz)
Current	7.0A
Air Speed	>90 m/s
Drying Time	7-9 Second

MRP : ₹ 9200/-

Model	1312
Material	SS Brushed Matt Finish
Size	W265xD125xH205 mm
Power	1500 Watt
Voltage	220V (50Hz-60Hz)
Current	7.0A
Air Speed	>16 m/s
Drying Time	10-12 Second

MRP : ₹ 6600/-

Model	1301
Material	ABS
Size	W240xD240xH230 mm
Power	2000 Watt
Voltage	220V (50Hz-60Hz)
Current	9.0A
Air Speed	>16 m/s
Drying Time	10-12 Second

MRP : ₹ 3300/-

Model	1302
Material	ABS
Size	W140xD150xH215 mm
Power	600 Watt
Voltage	220V (50Hz-60Hz)
Current	3.0A
Air Speed	>10 m/s
Drying Time	12-15 Second

Sensor Tap
Basin Mounted

Sensor Tap
Wall Mounted

Sensor Tap / Mixer

- Infrared Touch Free Sensor
- AC, DC Both
- IP 56
- 0.05-0.7MPa
- G 0.5 Inch
- 110V, 220V or DC 4 x 1.5V
- Brass With Chrome
- AA
- 0.5 Mw 'DC' / 2W 'AC'

Model : 1101A - Sensor Tap — MRP : ₹ 9550/-
Model : 1101B - Sensor Mixer — MRP : ₹ 11450/-

Promotion — Sensor Tap / Mixer

- Infrared Touch Free Sensor
- AC, DC Both
- IP 56
- 0.05-0.7MPa
- G 0.5 Inch
- 110V, 220V or DC 4 x 1.5V
- Brass With Chrome
- AA
- 0.5 Mw 'DC' / 2W 'AC'

Model : 1103A - Sensor Tap — MRP : ₹ 9550/-
Model : 1103B - Sensor Mixer — MRP : ₹ 11450/-

Sensor Tap / Mixer Wall Mounted

- Infrared Touch Free Sensor
- AC, DC Both
- IP 56
- 0.05-0.7MPa
- G 0.5 Inch
- 110V, 220V or DC 4 x 1.5V
- Brass With Chrome
- AA
- 0.5 Mw 'DC' / 2W 'AC'

Model : 1104A - Sensor Tap — MRP : ₹ 9550/-
Model : 1104B - Sensor Mixer — MRP : ₹ 11450/-

Sensor Tap / Mixer Tall Body

- Infrared Touch Free Sensor
- AC, DC Both
- IP 56
- 0.05-0.7MPa
- G 0.5 Inch
- 110V, 220V or DC 4 x 1.5V
- Brass With Chrome
- AA
- 0.5 Mw 'DC' / 2W 'AC'

Model : 1105A - Sensor Tap — MRP : ₹10000/-
Model : 1105B - Sensor Mixer — MRP : ₹ 11900/-

All Sensor Taps can be converted into Hot & Cold Mixer using this "Mixer Valve"

Mixer Valve

Distributor Box

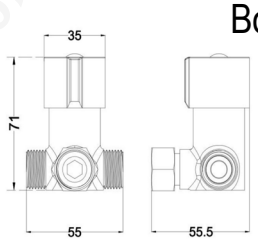

Mixer Valve — MRP : ₹ 1900/-

Sensor Urinal Flusher

- Infrared Touch Free Sensor
- AC, DC Both
- IP 56
- 0.02-0.7MPa
- G-0.5"
- 110V, 220V or DC 4 x 1.5V
- SS With Chrome + Satin
- AA

Model : 1201 — MRP : ₹ 9100/-

Automatic Aerosol Dispenser

- 2 "D" Size Batteries
- W88 x D83 x H238 mm
- Anytime from 0-24 Hours "Multiple Settings"
- 110 V - 240 V
- Any Time from 1 Min to 60 Min

Model : 1403

MRP : ₹ 3300/-

Automatic Soap Dispenser

- Infrared Touch Free Sensor
- Capacity 600 ML
- W110 x D 110mm x H165 mm
- 4 pcs AA Type Battery
- 1 ml once
- Virgin ABS
- The red LED light blinks very fast to indicate low battery.

Model : 1503

MRP : ₹ 2400/-

Automatic Sanitizer Dispenser

- Infrared Touch Free Sensor
- Capacity 1000 ML
- W 125 mm x D 110 mm x H 260 mm
- DC -C size batteries, 4 x 1.5 V
- On - Off Switch available
- 1 to 3 ml once
- Virgin ABS
- 0 to 10 cm
- Green - when working
- AC 1 AMP Adaptor

Model : 1505

MRP : ₹ 5000/-

Automatic Sanitizer Dispenser

- Infrared Touch Free Sensor
- Capacity 2200 ML
- W 248 mm x D 165 mm x H 470 mm
- On - Off Switch available
- 1 to 10 ml
- AC 220 - 230 V 50 - 60Hz
- Virgin ABS
- 3 to 10 cm
- Green - when working

Funnel | Misty Spray | Detachable tray

Model : 1506

MRP : ₹ 9000/-

Automatic Soap Dispenser

- Infrared Sensor
- Capacity 1000 ML
- W123 x D114 x H262 mm
- On - Off Switch Available
- 0.8 ml Once 1.6 ml Twice
- AC 6V/2 amp output
- Virgin ABS
- DC- AA Size Batteries, 8 x 1.5 V

Model : 1507

MRP : ₹ 5000/-

Automatic Sanitizer Dispenser

- Infrared Sensor
- Capacity 1000 ML
- W123 x D114 x H262 mm
- On - Off Switch Available
- 0.8 ml Once 1.6 ml Twice
- AC 6V/2 amp output
- Virgin ABS
- DC- AA Size Batteries, 8 x 1.5 V

Model : 1508

MRP : ₹ 5000/-

Our Soap Dispensers are made from "VIRGIN ABS" and high quality, "SOFT PRESS" pumps. Each model are tested by more than 10000 times pressings.

Manual Soap Dispensers

MRP : ₹ 2500 / 2700 / 2900

Manual Soap Dispenser

Model :1611-Brushed Matt Finish
Capacity : 500ml / 800ml /1000ml

MRP : ₹ 510/-

Manual Soap Dispenser

Model : 1612 - White & Grey
Capacity : 400ml
Drop : 1ml

MRP : ₹ 730/-

Manual Soap Dispenser

Model : 1613 - CP-Chrome
Capacity : 400ml
Drop : 1ml

MRP : ₹ 780/-

Manual Soap Dispenser

Model : 1613 - Black Gold
Capacity : 400ml
Drop : 1ml

MRP : ₹ 550/-

Manual Soap Dispenser

Model : 1614 - White
Capacity : 320ml
Drop : 1ml

MRP : ₹ 600/-

Manual Soap Dispenser

Model : 1614 - Black
Capacity : 320ml
Drop : 1ml

MRP : ₹ 550/-

Manual Soap Dispenser

Model : 1616- White
Capacity : 300ml Drop : 1ml

MRP : ₹ 650/-

Manual Soap Dispenser

Model : 1616- Cp
Capacity : 300ml Drop : 1ml

MRP : ₹ 650/-

Manual Soap Dispenser

Model : 1616- Black
Capacity : 300ml Drop : 1ml

MRP : ₹ 650/-

Manual Soap Dispenser

Model : 1617- White
Capacity : 400ml Drop : 1ml

MRP : ₹ 750/-

Manual Soap Dispenser

Model : 1618- Black
Capacity : 400ml Drop : 1ml

MRP : ₹ 1000/-

Manual Soap Dispenser

Model : 1618- Golden
Capacity : 400ml Drop : 1ml

MRP : ₹ 1000/-

Manual Soap Dispenser

Model : 1618- Rose Gold
Capacity : 400ml Drop : 1ml

MRP : ₹ 960/-

Manual Soap Dispenser

Model : 1419 -White
Capacity : 300ml Drop : 1ml

MRP : ₹ 1500/-

Manual Soap Dispenser -Double

Model : 1620 Color : White
Capacity : 200ml x 2 Drop : 1ml

MRP : ₹ 2100/-

Model : 3411-1
Acrylic Bath Set (4 in-1)
(Soap Dispenser, Soap Disc, Tumbler Holder,Water Glass)

Manual Soap Dispensers

MRP : ₹ 2620/-

Manual Soap Dispenser

Model : 1621- White & Grey
Capacity : 800 ml
Drop : 1ml

MRP : ₹ 3200/-

Manual Soap Dispenser- Double

Model : 1622 - White & Grey
Capacity : 550 ml x 2
Drop : 1ml

MRP : ₹ 1000/-

Manual Soap Dispenser

Model : 1623 - White
Capacity : 1000 ml
Drop : 1ml

MRP : ₹ 1100/-

Manual Soap Dispenser

Model : 1624 - Black
Capacity : 1000 ml
Drop : 1ml

MRP : ₹ 1200 /-

Manual Soap Dispenser

Model : 1625 - Chrome
Capacity : 1000 ml
Drop : 1ml

MRP : ₹ 1400 /-

Manual Soap Dispenser

Model : 1626 - Golden
Capacity : 1000 ml
Drop : 1ml

MRP : ₹ 1400 /-

Manual Soap Dispenser

Model : 1627- Rose Gold
Capacity : 1000 ml
Drop : 1ml

MRP : ₹ 2440/-

Tissue Paper Dispenser

Model : 1703
Color : White & Gery

MRP : ₹ 1900/-

Tissue Paper Dispenser

Model : 1704
Color : White & Gery

SS 304

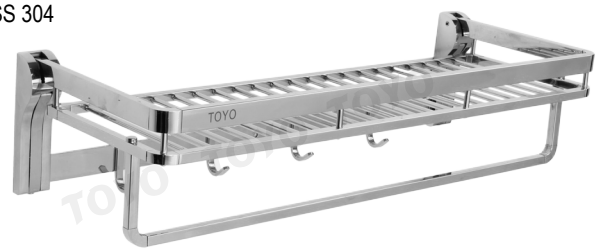

Model : 3317
Size : 60 cm (24")
Feature : SS 304 Foldable Towel Rack / Very Heavy

MRP : ₹ 9200/-

SS 304

Model : 3311-24" / 3311-20"
Size : 60 cm (24") / 50 cm (20")
Feature : SS 304 Foldable Towel Rack

MRP :
24" : ₹ 3300/-
20" : ₹ 3200/-

SS 304

Model : 3315
Size : 60 cm (24")
Feature : SS 304 Foldable Towel Rack

MRP :₹ 5100/-

Model : 3316
Size : 60 cm (24")
Feature : Aluminium Foldable Towel Rack

MRP :₹ 3600/-

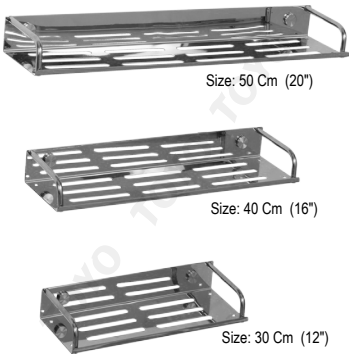

Model : 2711
Size : 20"/ 16" / 12"
Feature : SS Heavy Straight Shelf

MRP :
20" : ₹ 880/-
16" : ₹ 780/-
12" : ₹ 680/-

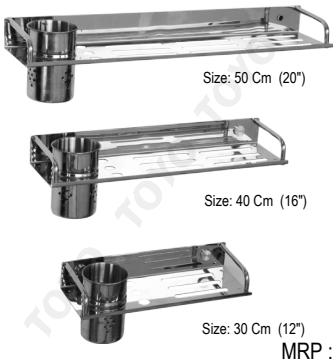

Model : 2724
Size : 20"/16"/12"
Feature : SS Heavy Straight Shelf With Tumbler Holder

MRP :
20" : ₹ 1080/
16" : ₹ 980/-
12" : ₹ 880/-

SS 304

Model : 2713
Size : 30 cm
Feature : SS 304 Very Heavy Shelf / Curved Front

MRP :
₹ 1740/-

SS 304

Model : 2712-1
Size : 9"
Feature : SS 304 / Very Heavy Corner Shelf

MRP :
₹ 1740/-

SS 304

Model : 2712-2
Size : 9" x 2
Feature : SS 304 / Very Heavy Corner Shelf Double With Hooks

MRP :
₹ 3980/-

Model : 2722
Size : 9"
Feature : SS Heavy Corner Shelf

MRP :
₹ 920/-

Model : 2723
Size : 9" x 2
Feature : SS Heavy Double Corner Shelf with Hook

MRP :
₹ 2180/-

Shower Tubes / Shower Arms

MRP : ₹ 740/-

Model : **2421**-1.5 mtr Color : Chrome
Feature : SS Heavy Duty Shower Tube Double Lock SS Hose / 360 Degree Freely Rotating Bearing Technology to avoid hose knoting / Inside'A' Grade Embedded EPDM to sustain High pressure & Temperature / Heavy Brass insert

Model : 2411- 1.5 mtr / 2411-1 mtr
Size : 1.5 Meter / 1 Meter

Feature
- SS Double Lock Chrome Hose
- Heavy Brass Nuts with Chrome
- Heavy Brass Insert
- A-Grade EPDM Inner Tube

MRP : 1.5 mtr : ₹ 410/- | 1 mtr : ₹ 370/-

MRP : ₹ 380/-

Model : 2412
Color : White
Feature : PVC Spring Shower Tube With Brass Nuts

Model : 2415-G
Sizes : 1.5 mtr
Color : Golden

MRP : ₹ 700/-

Model : 2416-RG
Sizes : 1.5 mtr
Color : Rose Gold

MRP : ₹ 700/-

Model : 2417-B
Sizes : 1.5 mtr
Color : Black

MRP : ₹ 700/-

Model : 8801-G
Sizes : 18"
Color : Golden

MRP : ₹ 1450/-

Model : 8801-RG
Sizes : 18"
Color : Rose Gold

MRP : ₹ 1450/-

Model : 8801-B
Sizes : 18"
Color : Black

MRP : ₹ 1450/-

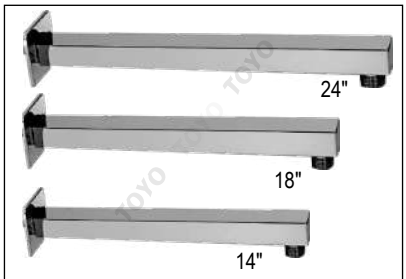

Model : 8801
Sizes : 24" / 18" / 14"
Color : Chrome

MRP :
24" : ₹ 1450/-
18" : ₹ 1050/-
14" : ₹ 955/-

Model : 8811
Sizes : 24"/18"/14"
Color : Chrome

MRP :
24" : ₹ 550/-
18" : ₹ 415/-
14" : ₹ 348/-

Model : 8803
Size : 8"
Color : Chrome

MRP : ₹ 780/-

Model : 8811
Size : 9"

MRP : ₹ 218/-

MRP :₹ 1200/-

Model : 8802
Size : 12"
Ceiling Square Shower Arm

Connection Pipes / Bottles Traps

Model : 2401
Size : 45 cm (18")
60 cm (24")
90 cm (36")

- Hygienic
- Heavy Duty Connection Pipe
- Can Sustain 20 Bar Pressure
- -40° c to 100° c Sustainable
- Beauty Remains Long Lasted
- SS 304 Hose
- Heavy Brass Nuts with Chrome
- A-Grade EPDM
- Plastic Wrinch Together

MRP :
18" : ₹ 250/-
24" : ₹ 280/-
36" : ₹ 370/-

PVC Connection Pipe

Model : 2404
Size : 60 cm (24")
MRP : ₹ 96/-

PTMT Connection Pipe

Model : 2405
Size : 18" (45 cm) / 24" (60 cm) / 36" (90 cm)
MRP : ₹ 106/ 120/ 154/-

Plastic Waste Pipe

Model : 2502
Weight : 95 gm
Length : 90 cm (36")
MRP : ₹ 60/-

Model : 2103
Bottle Trap
MRP : ₹ 964/-

Model : 2104
Bottle Trap
MRP : ₹ 1720/-

Model : 2105
Bottle Trap / Full Brassa
MRP : ₹ 2260/-

U.S. Technology

85% of Natural Quartz

Micro Perfection

10 Years's Warranty

Properties and Features of TOYO Quarts Sinks:-

- The Sink characterizes the finest quality of materials. Made from 85% of Natural Quartz With U.S. Technology resulting unique properties.
- The Technology used to get the result for finest surface quality with micro accuracy.
- The Speciality of the material prevents the adhesion of liquids, enhances shine intensifies colour.
- Scratch Resistant
- Stain Resistant
- Impact Resistant
- Antimicrobial protection
- Easy to Clean
- Heat Resistant
- Highly durable

Scratch Resistant

Stain Resistant

Impact Resistant

Antmicrobial Resistant

Easy to Clean

Heat Resistance

High Durability

aroma
of perfection
& excellence

Model No: 1816

QUARTZ KITCHEN SINK

10MM THICKNESS

Model Name	Gabbro	
Model No.	1816	
Size (LxW)	18" x 16"	
Weight	9 kg. (Approx)	
Coupling	SS 304	
MRP	GRANITE	₹ 7800/-
	METALLIC	₹ 8200/-

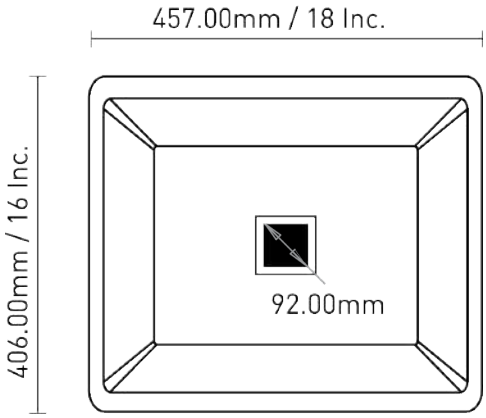

TOP MOUNT FLUSH MOUNT UNDER MOUNT

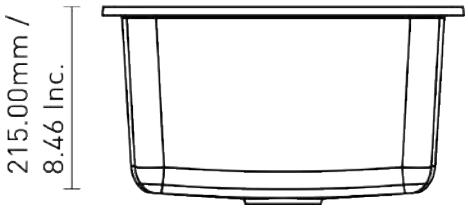

COLORS / SHADES

A	B	C	D	
				Metallic Series (Gabbro-M)
Metallic Black	Metallic Pearl White	Metallic Dark Grey	Metallic Bronze	
E	**F**	**G**	**H**	
				Granite Series (Gabbro-G)
Granito Pearl White	Granito Pearl Grey	Granito Redstone	Granito Ivory	

Model No: 2118

QUARTZ KITCHEN SINK

10MM THICKNESS

Model Name	Pumice	
Model No.	2118	
SIZE (LxW)	21" x 18"	
WEIGHT	11 kg. (Approx)	
Coupling	SS 304	
MRP	GRANITE	₹ 8200/-
	METALLIC	₹ 8600/-

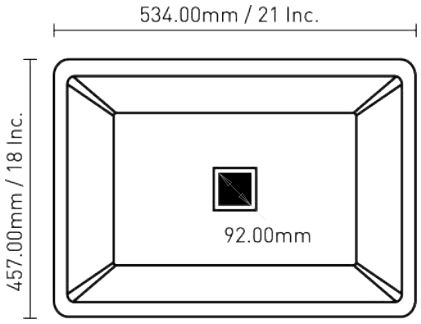

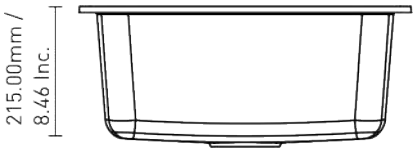

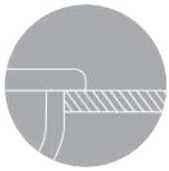

TOP MOUNT

FLUSH MOUNT

UNDER MOUNT

COLORS / SHADES

A	B	C	D	
Metallic Black	Metallic Pearl White	Metallic Dark Grey	Metallic Bronze	**Metallic Series (Pumice-M)**
E	**F**	**G**	**H**	
Granito Pearl White	Granito Pearl Grey	Granito Redstone	Granito Ivory	**Granite Series (Pumice-G)**

Model No: 2418

QUARTZ KITCHEN SINK

10MM THICKNESS

Model Name	Scoria	
Model No.	2418	
SIZE (LxW)	24" x 18"	
WEIGHT	13.5 kg. (Approx)	
Coupling	SS 304	
MRP	GRANITE	₹ 8700/-
	METALLIC	₹ 9100/-

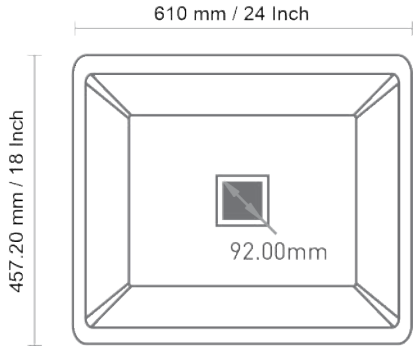

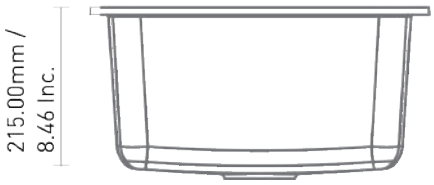

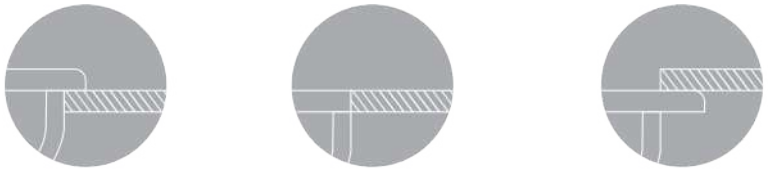

TOP MOUNT FLUSH MOUNT UNDER MOUNT

COLORS / SHADES

A	B	C	D	
				Metallic Series (Scoria-M)
Metallic Black	Metallic Pearl White	Metallic Dark Grey	Metallic Bronze	
E	F	G	H	
				Granite Series (Scoria-G)
Granito Pearl White	Granito Pearl Grey	Granito Redstone	Granito Ivory	

Model No: 3618

QUARTZ KITCHEN SINK

10MM THICKNESS

Model Name	Obsidian	
Model No.	3618	
SIZE (LxW)	36" x 18"	
WEIGHT	18 kg. (Approx)	
Coupling	SS 304	
MRP	GRANITE	₹ 16300/-
	METALLIC	₹ 17200/-

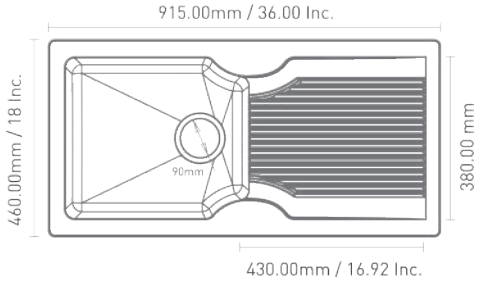

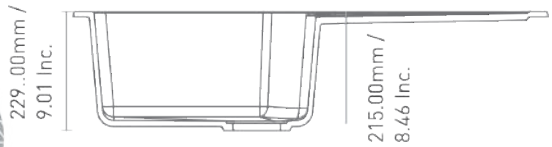

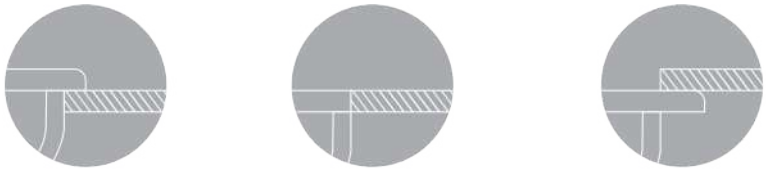

TOP MOUNT FLUSH MOUNT UNDER MOUNT

COLORS / SHADES

METALLIC BLACK	A	Metallic Series (Obsidian-M)
METALLIC PEARL WHITE	B	
METALLIC DARK GREY	C	
METALLIC BRONZE	D	
GRANITO PEARL WHITE	E	Granite Series (Obsidian-G)
GRANITO PEARL GREY	F	
GRANITO REDSTONE	G	
GRANITO IVORY	H	

QUARTZ KITCHEN SINK

10MM THICKNESS

Model No : 3720

Model Name	Basalt	
Model No.	3720	
SIZE (LxW)	37" x 20"	
WEIGHT		
Coupling	SS 304	
MRP	GRANITE	₹ 18100/-
	METALLIC	₹ 19000/-

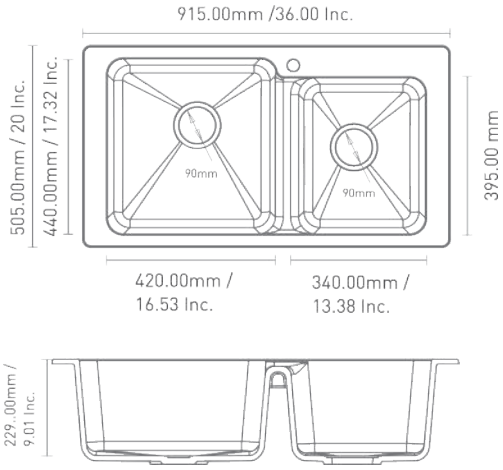

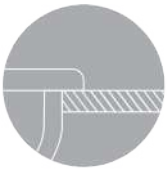

TOP MOUNT

FLUSH MOUNT

UNDER MOUNT

COLORS / SHADES

METALLIC BLACK	A	Metallic Series (Basalt-M)
METALLIC PEARL WHITE	B	
METALLIC DARK GREY	C	
METALLIC BRONZE	D	
GRANITO PEARL WHITE	E	Granite Series (Basalt-G)
GRANITO PEARL GREY	F	
GRANITO REDSTONE	G	
GRANITO IVORY	H	

Model No: 4519

QUARTZ KITCHEN SINK

10MM THICKNESS

Model Name	Rhyolite	
Model No.	4519	
SIZE (LxW)	45" x 19"	
WEIGHT	27.5 kg. (Approx)	
Coupling	SS 304	
MRP	GRANITE	₹ 20800/-
	METALLIC	₹ 22600/-

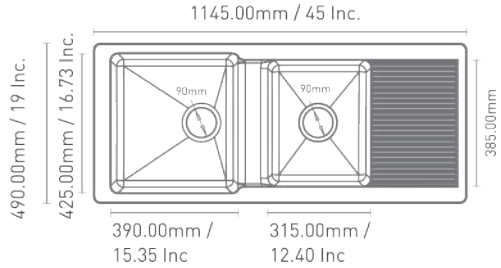

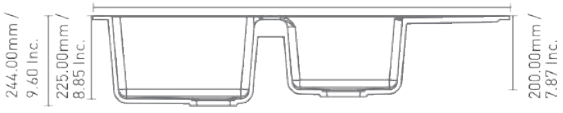

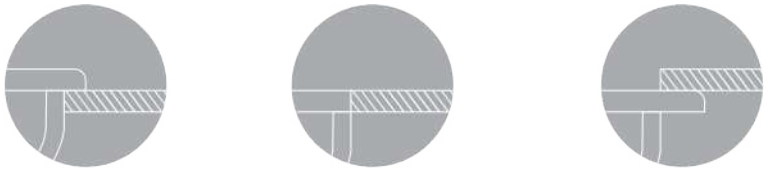

TOP MOUNT FLUSH MOUNT UNDER MOUNT

COLORS / SHADES

METALLIC BLACK	A	Metallic Series (Rhyolite-M)
METALLIC PEARL WHITE	B	
METALLIC DARK GREY	C	
METALLIC BRONZE	D	
GRANITO PEARL WHITE	E	Granite Series (Rhyolite-G)
GRANITO PEARL GREY	F	
GRANITO REDSTONE	G	
GRANITO IVORY	H	

Metallic White

Metallic Black

Metallic Dark Grey

Granito Pearl Grey

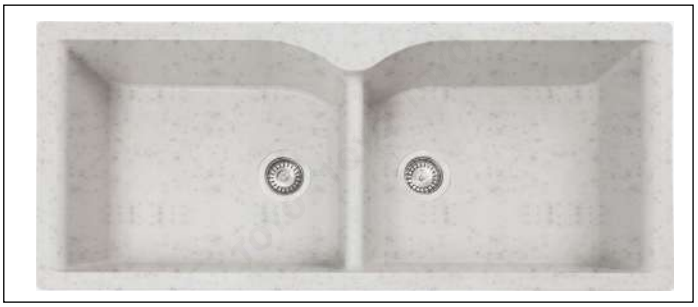

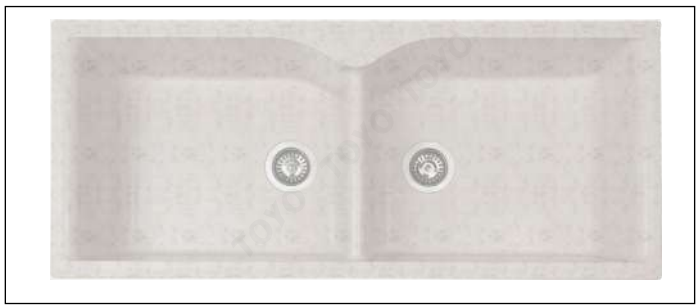

Granito Pearl Red

QUARTZ KITCHEN SINK

10MM THICKNESS

Model Name	Felsic	
Model No.	4520	
Size (LxW)	45" x 20"	
Coupling	SS 304	
MRP	GRANITE	₹ 20800/-
	METALLIC	₹ 22600/-

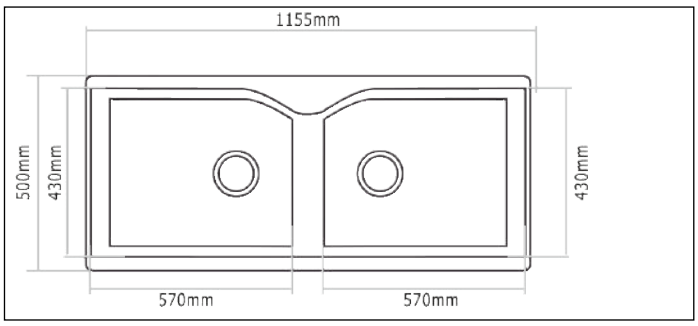

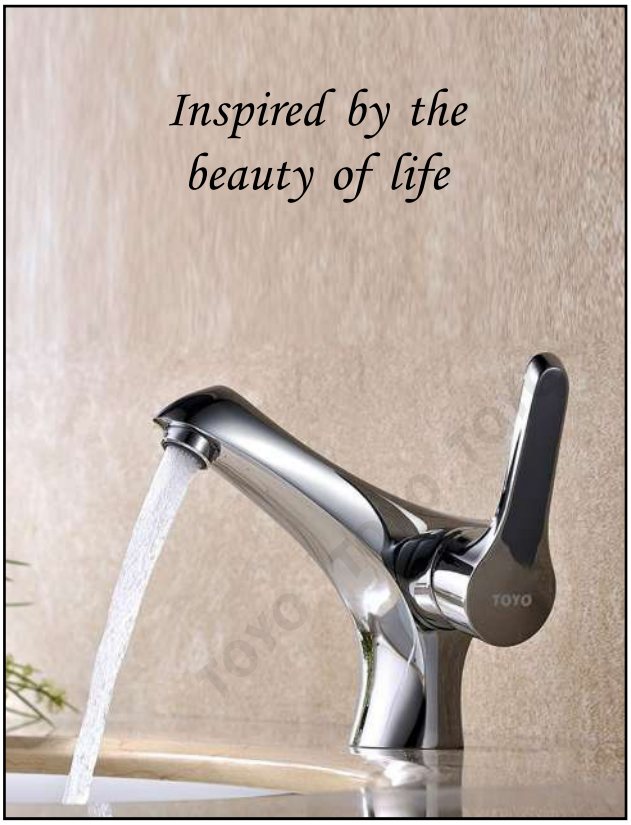

Upcoming New Models

Add a royal touch to bathroom decor with the TOYO bathroom faucets. These striking bathroom faucets create a unique look that is perfect for the modern bathroom. Designed for easy installation and convenient for daily use.

Features :

- Design for effortless flow control.
- Premium finish is corrosion & rust- resistant.
- Top-quality cartridge for reliable use.
- Premium Brass quality for maximum durability.
- Our Products carry warranties upto 12 years with dedicated Toll-free Customer care no.

Soft Water Flow

High Grade Chroming

Smooth Operating

Water Saving Advanced Flow Regulator

Higher Longevity 5 lac + Cycles

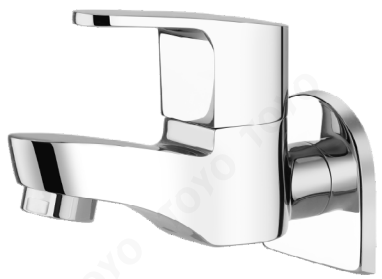

MRP : ₹ 1810/-

Item Name : Bib Cock
Model : EM-51201
Color : CP

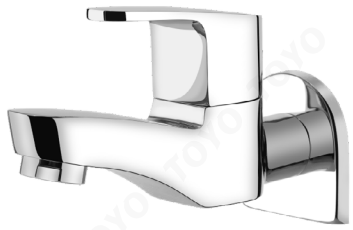

MRP : ₹ 1910/-

Item Name : Long Body Bib Cock
Model : EM-51202
Color : CP

MRP : ₹ 3060/-

Item Name : 2 Way Bib Cock
Model : EM-51203
Color : CP

MRP : ₹ 1540/-

Item Name : Angle Valve
Model : EM-51204
Color : CP

MRP : ₹2620/-

Item Name : 2 Way Angle Valve
Model : EM-51205
Color : CP

MRP : ₹ 2440/-

Item Name : Pillar Cock
Model : EM-51206
Color : CP

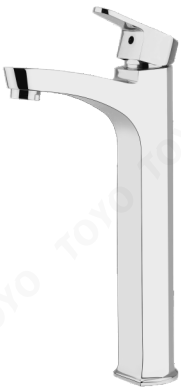

MRP : ₹ 3970/-

Item Name : Tall Pillar Cock with Long Spout
Model : EM-51207
Color : CP

MRP : ₹ 4240/-

Item Name : Single Lever Basin Mixer
Model : EM-51208
Color : CP

MRP : ₹ 5240/-

Item Name : S/L Basin Mixer Tall Body with Long Spout
Model : EM-51209
Color : CP

MRP : ₹ 7120/-

Item Name : 2 in 1 Wall Mixer with "L" Bend
Model : EM-51210
Color : CP

MRP : ₹ 7670/-

Item Name : 3 in 1 Wall Mixer with "L" Bend
Model : EM-51211
Color : CP

MRP : ₹ 5800/-

Item Name : S/L High-Flow Diverter-40mm
Model No. : EM-51212
Color : CP

MRP : ₹ 1630/-

Item Name : Spout Plain
Model No. : EM-51214
Color : CP

MRP : ₹ 2130/-

Item Name : Spout Tip Ton
Model No. : EM-51215
Color : CP

MRP : ₹ 6000/-

Item Name : S/L Concealed Basin Mixer Wall Mounted
Model No. : EM-51216
Color : CP

MRP : ₹ 1880/-

Item Name : Concealed Stop Cock (15mm)
Model : EM-51217-15
Color : CP

MRP : ₹ 1900/-

Item Name : Concealed Stop Cock (20 mm)
Model : EM-51217-20
Color : CP

MRP : ₹ 2400/-

Item Name : Flush Cock (38 mm)
Model : EM-51218
Color : CP

MRP : ₹ 5320/-

Item Name : Sink Mixer
Model : EM-51219
Color : CP

MRP : ₹ 5920/-

Item Name : Sink Mixer with Long Extended Spout
Model : EM-51220
Color : CP

MRP : ₹ 5500/-

Item Name : Centre Hole Sink Mixer with Regular Swan Neck
Model No. : EM-51221
Color : CP

MRP : ₹ 6100/-

Item Name : Centre Hole Sink Mixer with Long Extended Swan Neck
Model No. : EM-51222
Color : CP

MRP : ₹ 2980/-

Item Name : Swan Neck Side Handle
Model No. : EM-51223
Color : CP

MRP : ₹ 3580/-

Item Name : Swan Neck Long Extended Side Handle
Model No. : EM-51224
Color : CP

MRP : ₹ 2800/-

Item Name : Sink Cock
Model No. : EM-51225
Color : CP

MRP : ₹ 3400/-

Item Name : Sink Cock Long Extended
Model No. : EM-51226
Color : CP

MRP : ₹ 5860/-

Item Name : Sink Mixer Sq. Heavy Spout
Model No. : EM-51227
Color : CP

MRP : ₹ 6400/-

Item Name : Centre Hole Sink Mixer with Sq. Heavy spout
Model No. : EM-51228
Color : CP

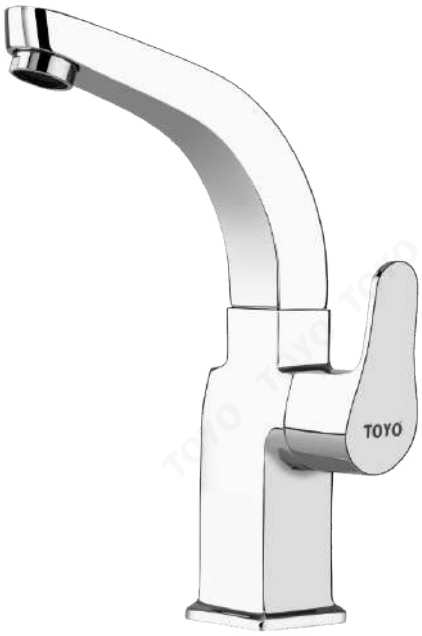

MRP : ₹ 3700/-

Item Name : Swan Neck Sq. Heavy Spout
Model No. : EM-51229
Color : CP

MRP : ₹ 3160/-

Item Name : Sink cock Sq. Heavy Spout
Model No. : EM-51230
Color : CP

MRP : ₹ 1630/-

Item Name : Bib Cock
Model : RU-51301
Color : CP

MRP : ₹ 1810/-

Item Name : Long Body Bib Cock
Model : RU-51302
Color : CP

MRP : ₹ 2170/-

Item Name : 2 Way Bib Cock
Model : RU-51303
Color : CP

MRP : ₹ 1270/-

Item Name : Angle Valve
Model : RU-51304
Color : CP

MRP : ₹ 1860/-

Item Name : 2 Way Angle Valve
Model : RU-51305
Color : CP

MRP : ₹ 1900/-

Item Name : Pillar Cock
Model : RU-51306
Color : CP

MRP : ₹ 2260/-

Item Name : Pillar Cock Medium
Model : RU-51306-M
Color : CP

MRP : ₹ 3160/-

Item Name : Tall Pillar Cock
Model : RU-51307
Color : CP

MRP : ₹ 3880/-

Item Name : Single Lever Basin Mixer
Model : RU-51308
Color : CP

MRP : ₹ 6600/-

Item Name : 2 in 1 Wall Mixer with "L" Bend
Model : RU-51310
Color : CP

MRP : ₹ 7200/-

Item Name : 3 in 1 Wall Mixer with "L" Bend
Model : RU-51311
Color : CP

MRP : ₹ 5800/-

Item Name : S/L High - Flow Diverter -40mm
Model : RU-51312
Color : CP

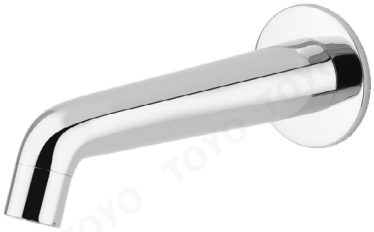

MRP : ₹ 1360/-

Item Name : Spout Plain
Model : RU-51314
Color : CP

MRP : ₹ 1900/-

Item Name : Spout Tip Ton
Model : RU-51315
Color : CP

MRP : ₹ 6000/-

Item Name : S/L Concealed Basin Mixer Wall Mounted
Model : RU-51316
Color : CP

MRP : ₹ 1780/-

Item Name : Concealed Stop Cock (15 mm)
Model : RU-51317-15
Color : CP

MRP : ₹ 1820/-

Item Name : Concealed Stop Cock (20 mm)
Model : RU-51317-20
Color : CP

MRP : ₹ 2300/-

Item Name : Flush Cock (38 mm)
Model : RU-51318
Color : CP

MRP : ₹ 4600/-

Item Name : Sink Mixer Regular Swan Neck
Model : RU-51319
Color : CP

MRP : ₹ 5200/-

Item Name : Sink Mixer with Long Extended Spout
Model : RU-51320
Color : CP

MRP : ₹ 4200/-

Item Name : Centre Hole Sink Mixer with Regular Swan Neck
Model : RU-51321
Color : CP

MRP : ₹ 4800/-

Item Name : Centre Hole Sink Mixer Long Extended Swan Neck
Model : RU-51322
Color : CP

MRP : ₹ 2350/-

Item Name : Swan Neck
Model : RU-51323
Color : CP

MRP : ₹ 2950/-

Item Name : Swan Neck Long Extended
Model : RU-51324
Color : CP

MRP : ₹ 2170/-

Item Name : Sink Cock
Model : RU-51325
Color : CP

MRP : ₹ 2770/-

Item Name : Sink Cock Long Extended Spout
Model : RU-51326
Color : CP

MRP : ₹ 4880/-

Item Name : Single Lever Basin Mixer Tall Body
Model : RU-51309
Color : CP

MRP : ₹ 1320/-

Item Name : Bib Cock
Model : AL-51501
Color : CP

MRP : ₹ 1420/-

Item Name : Long Body Bib Cock
Model : AL-51502
Color : CP

MRP : ₹ 1520/-

Item Name : Long Body Bib Cock - Extra Long
Model : AL-51502-L
Color : CP

MRP : ₹ 1990/-

Item Name : 2 Way Bib Cock
Model : AL-51503
Color : CP

MRP : ₹ 1090/-

Item Name : Angle Valve
Model : AL-51504
Color : CP

MRP : ₹ 1810/-

Item Name : 2 Way Angle Valve
Model : AL-51505
Color : CP

MRP : ₹ 1630/-

Item Name : Pillar Cock
Model : AL-51506
Color : CP

MRP : ₹ 2710/-

Item Name : Tall Pillar Cock
Model : AL-51507
Color : CP

MRP : ₹ 3800/-

Item Name : Single Lever Basin Mixer
Model : AL-51508
Color : CP

MRP : ₹ 5950/-

Item Name : 2 in 1 Wall Mixer with "L" Bend
Model : AL-51510
Color : CP

MRP : ₹ 6400/-

Item Name : 3 in 1 Wall Mixer with "L" Bend
Model : AL-51511
Color : CP

MRP : ₹ 5600/-

Item Name : S/L High-Flow Diverter-40mm
Model : AL-51512
Color : CP

MRP : ₹ 1200/-

Item Name : Spout Plain
Model : AL-51514
Color : CP

MRP : ₹ 1720/-

Item Name : Spout Tip Ton
Model : AL-51515
Color : CP

MRP : ₹ 5320/-

Item Name : S/L Concealed Basin Mixer Wall Mounted
Model : AL-51516
Color : CP

MRP : ₹ 1750/-

Item Name : Concealed Stop Cock (15 mm)
Model : AL-51517-15
Color : CP

MRP : ₹ 1770/-

Item Name : Concealed Stop Cock (20 mm)
Model : AL-51517-20
Color : CP

MRP : ₹ 2200/-

Item Name : Flush Cock (38 mm)
Model : AL-51518
Color : CP

MRP : ₹ 4150/-

Item Name : Sink Mixer Regular Swan Neck
Model : AL-51519
Color : CP

MRP : ₹ 4750/-

Item Name : Sink Mixer with Long Extended Spout
Model : AL-51520
Color : CP

MRP : ₹ 4060/-

Item Name : Centre Hole Sink Mixer with Regular Swan Neck
Model : AL-51521
Color : CP

Item Name : Centre Hole Mixer with Long Extended Swan Neck
Model : AL-51522
Color : CP

MRP : ₹ 4660/-

Item Name : Swan Neck
Model : AL-51523
Color : CP
MRP : ₹ 2440/-

Item Name : S/N Regular with Long Extended
Model : AL-51523-L
Color : CP
MRP : ₹ 3000/-

Item Name : Swan Neck Long Extended
Model : AL-51524
Color : CP

MRP : ₹ 3040/-

Item Name : Sink Cock
Model : AL-51525
Color : CP
MRP : ₹ 2130/-

Item Name : S/C Regular with Long E/S
Model : AL-51525-L
Color : CP
MRP : ₹ 2530/-

Item Name : Sink Cock Long Extended Spout
Model : AL-51526
Color : CP
MRP : ₹ 2730/-

Item Name : S/L Basin Mixer Tall Body
Model : AL-51509
Color : CP
MRP : ₹ 4800/-

MRP : ₹ 1090/-

Item Name : Bib Cock
Model : BE-51601
Color : CP

MRP : ₹ 1190/-

Item Name : Long Body Bib Cock
Model : BE-51602
Color : CP

MRP : ₹ 1290/-

Item Name : Long Body Bibi Cock-Extra Long
Model : BE-51602-L
Color : CP

MRP : ₹ 1820/-

Item Name : 2 Way Bib Cock
Model : BE-51603
Color : CP

MRP : ₹ 880/-

Item Name : Angle Valve
Model : BE-51604
Color : CP

MRP : ₹ 1140/-

Item Name : 2 Way Angle Valve
Model : BE-51605
Color : CP

MRP : ₹ 1360/-

Item Name : Pillar Cock
Model : BE-51606
Color : CP

MRP : ₹ 5500/-

Item Name : 2 in 1 Wall Mixer with "L" Bend
Model : BE-51610
Color : CP

MRP : ₹ 6100/-

Item Name : 3 in 1 Wall Mixer with "L" Bend
Model : BE-51611
Color : CP

MRP : ₹ 5800/-

Item Name : S/L High-Flow Diverter 40mm
Model : BE-51612
Color : CP

MRP : ₹ 960/-

Item Name : Spout Plain
Model : BE-51614
Color : CP

MRP : ₹ 1550/-

Item Name : Spout Tip Ton
Model : BE-51615
Color : CP

Item Name : Concealed Stop Cock 20 mm / 15 mm
Model : BE-51617-20
Model : BE-51617-15

MRP :
20mm : ₹ 1720/-
15mm : ₹ 1700/-

Item Name : Flush Cock (38 mm)
Model : BE-51618
Color : CP

MRP : ₹ 2100/-

Item Name : Sink Mixer
Model : BE-51619
Color : CP

MRP : ₹ 3970/-

MRP : ₹ 4370/-

Item Name : Sink Mixer with Long Extended Spout
Model : BE-51620
Color : CP

MRP : ₹ 3610/-

Item Name : Centre Hole Sink Mixer Regular Swan Neck
Model : BE-51621
Color : CP

MRP : ₹ 4010/-

Item Name : Centre Hole Sink Mixer with Long Extended Swan Neck
Model : BE-51622
Color : CP

MRP : ₹ 2080/-

Item Name : Swan Neck
Model : BE-51623
Color : CP

MRP : ₹ 2480/-

Item Name : Swan Neck Long Extended
Model : BE-51624
Color : CP

MRP : ₹ 1810/-

Item Name : Sink Cock
Model : BE-51625
Color : CP

MRP : ₹ 2210/-

Item Name : Sink Cock Long Extended Spout
Model : BE-51626
Color : CP

MRP : ₹ 830/-

Item Name : Bib Cock
Model : EC-51701
Color : CP

MRP : ₹ 930/-

Item Name : Long Body Bib Cock
Model : EC-51702
Color : CP

MRP : ₹ 1230/-

Item Name : 2 Way Bib Cock Single Handle
Model : EC-51703
Color : CP

MRP : ₹ 600/-

Item Name : Angle Valve
Model : EC-51704
Color : CP

MRP : ₹ 1050/-

Item Name : 2 Way Angle Valve
Model : EC-51705
Color : CP

MRP : ₹ 1050/-

Item Name : Pillar Cock
Model : EC-51706
Color : CP

Item Name : 2/3 in 1 Wall Mixer with "L" Bend
Model : EC-51710 -MRP : ₹ 4300/-(2in1)
Model : EC-51711 -MRP : ₹ 4930/-(3in1)

MRP : ₹ 4700/-

Item Name : 2 in 1 Wall Mixer with Cruntch
Model : EC-51712
Color : CP

MRP : ₹ 3610/-

Item Name : Sink Mixer
Model : EC-51719
Color : CP

MRP : ₹ 3970/-

Item Name : Sink Mixer with Long Extended Spout
Model : EC-51720
Color : CP

MRP : ₹ 3070/-

Item Name : Centre Hole Sink Mixer Regular Swan Neck
Model : EC-51721
Color : CP

MRP : ₹ 3470/-

Item Name : Centre Hole Sink Mixer Long Extended Swan Neck
Model : EC-51722
Color : CP

MRP : ₹ 1900/-

Item Name : Swan Neck
Model : EC-51723
Color : CP

MRP : ₹ 2300/-

Item Name : Swan Neck Long Extended
Model : EC-51724
Color : CP

MRP : ₹ 1630/-

Item Name : Sink Cock
Model : EC-51725
Color : CP

Item Name : Sink Cock Long Extended Spout
Model : EC-51726
Color : CP

MRP : ₹ 2030/-

Item Name : Concealed Stop Cock 20 mm / 15 mm
Model : EC-51717-20
Model : EC-51717-15

MRP :
20mm : ₹ 1680/-
15mm : ₹ 1660/-

Item Name : Flush Cock (38 mm)
Model : EC-51718
Color : CP

MRP : ₹ 2100/-

MRP : ₹ 1690/-

Item Name : Push Metric Pillar cock
Model : PM-51801
Color : CP

MRP : ₹ 4200/-

Item Name : Metropole-1"
Model : MP-51811
Color : CP

MRP : ₹ 1600/-

Item Name : Push Metric Bib cock
Model : PM-51802
Color : CP

MRP : ₹ 4600/-

Item Name : Metropole-1.25"
Model : MP-51812
Color : CP

MRP : ₹ 1140/-

Item Name : Pressmatic Angle Valve
Model : PM-51803
Color : CP

MRP : ₹ 5000/-

Item Name : Metropole-1.5"
Model : MP-51813
Color : CP

TOYO
SANITARY WARES

Flexi Series

Brass C.P. Fittings

MRP : ₹ 4600/-

Item Name : Centre Hole Sink Mixer with Flexible Color Spout
Model : BE-51651
Color : Orange

MRP : ₹ 4800/-

Item Name : Centre Hole Sink Mixer with Flexible Multi Flow Color Spout
Model : BE-51652
Color : Black

MRP : ₹ 2900/-

Item Name : Swan Neck with Flexible Color Spout
Model : BE-51653
Color : Orange

MRP : ₹ 3100/-

Item Name : Swan Neck with Flexible Multiflow Color Spout
Model : BE-51654
Color : Black

MRP : ₹ 2550/-

Item Name : Sink Cock with Flexible Color Spout
Model : BE-51655
Color : Orange

MRP : ₹ 2750/-

Item Name : Sink Cock with Flexible Multiflow Color Spout
Model : BE-51656
Color : Black

TOYO
SANITARY WARES

Abute Series

Brass Bathroom Accessories

Features :

- 56 Grade Full Brass
- Made From Die Forging Technology
- Unique Blackened Bronze Finish
- Aesthetic Design

TOYO SANITARY WARES

Abute Series

Brass Bathroom Accessories

Features :-

- 56 Grade Full Brass
- Made From Die Forging Technology
- Hitgh Grade Plating
- Aesthetic Design

Item Name : Towel Rack
Model : 12110
MRP : ₹ 5500/-

Item Name : Robe Hook
Model : 12101
MRP : ₹ 740/-

Item Name : Tumbler Holder
Model : 12102
MRP : ₹ 1230/-

Item Name : Soap Dish Glass
Model : 12103
MRP : ₹ 1230/-

Item Name : Soap Dispenser Glass
Model : 12104
MRP : ₹ 1550/-

Item Name : Soap Dish Brass
Model : 12106
MRP : ₹ 1090/-

Item Name : Towel Ring
Model : 12107
MRP : ₹ 1540/-

Item Name : Paper Holder
Model : 12108
MRP : ₹ 1090/-

Item Name : Towel Rod
Model : 12109
MRP : ₹ 1720/-

Features :-

- 56 Grade Full Brass
- Made From Die Forging Technology
- High Grade Plating
- Aesthetic Design

Item Name : Robe Hook
Model : 11101
MRP : ₹ 910/-

Item Name : Tumbler Holder
Model : 11102
MRP : ₹ 1360/-

Item Name : Soap Dish Glass
Model : 11103
MRP : ₹ 1360/-

Item Name : Soap Dispenser Glass
Model : 11104
MRP : ₹ 1540/-

Item Name : Soap Basket
Model : 11105
MRP : ₹ 1770/-

Item Name : Towel Ring
Model : 11107
MRP : ₹ 1360/-

Item Name : Paper Holder
Model : 11108
MRP : ₹ 1540/-

Item Name : Towel Rod
Model : 11109
MRP : ₹ 2440/-

Features :-

- 56 Grade Full Brass
- Made From Die Forging Technology
- High Grade Plating
- Aesthetic Design

Item Name : Towel Rack
Model : 11210
MRP : ₹ 6130/-

Item Name : Robe Hook
Model : 11201
MRP : ₹ 748/-

Item Name : Tumbler Holder
Model : 11202
MRP : ₹ 1320/-

Item Name : Soap Dish Glass
Model : 11203
MRP : ₹ 1320/-

Item Name : Soap Dispenser Glass
Model : 11204
MRP : ₹ 1540/-

Item Name : Soap Dish Brass
Model : 11206
MRP : ₹ 1050/-

Item Name : Towel Ring
Model : 11207
MRP : ₹ 1540/-

Item Name : Paper Holder
Model : 11208
MRP : ₹ 1450/-

Item Name : Towel Rod
Model : 11209
MRP : ₹ 1630/-

Features :-

- 56 Grade Full Brass
- Made From Die Forging Technology
- High Grade Plating
- Aesthetic Design

Item Name : Robe Hook
Model : 11301
MRP : ₹ 730/-

Item Name : Tumbler Holder
Model : 11302
MRP : ₹ 910/-

Item Name : Soap Dish Glass
Model : 11303
MRP : ₹ 910/-

Item Name : Soap Dispenser Glass
Model : 11304
MRP : ₹ 1450/-

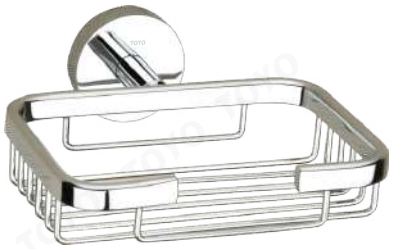

Item Name : Soap Basket
Model : 11305
MRP : ₹ 1360/-

Item Name : Towel Ring
Model : 11307
MRP : ₹ 1280/-

Item Name : Paper Holder
Model : 11308
MRP : ₹ 1280/-

Item Name : Towel Rod
Model : 11309
MRP : ₹ 1630/-

Features :-

- 56 Grade Full Brass
- Made From Die Forging Technology
- High Grade Plating
- Aesthetic Design

Item Name : Robe Hook
Model : 11401
MRP : ₹ 460/-

Item Name : Tumbler Holder Brass
Model : 11402
MRP : 1040/-

Item Name : Soap Dispenser Brass
Model : 11404
MRP : 1400/-

Item Name : Soap Dish Brass
Model : 11406
MRP : 830/-

Item Name : Towel Ring
Model : 11407
MRP : 880/-

Item Name : Paper Holder
Model : 11408
MRP : ₹ 1280/-

Item Name : Towel Rod
Model : 11409
MRP : ₹ 1520/-

Item Name : Towel Rack
Model : 11410
MRP : ₹ 3980/-

Features :-

- 56 Grade Full Brass
- Made From Die Forging Technology
- High Grade Plating
- Aesthetic Design

Item Name : Robe Hook
Model : 11501
MRP : ₹ 360/-

Item Name : Tumbler Holder
Model : 11502
MRP : ₹ 860/-

Item Name : Soap Dispenser Glass
Model : 11504
MRP : ₹ 1150/-

Item Name : Soap Dish Brass
Model : 11506
MRP : ₹ 600/-

Item Name : Towel Ring
Model : 11507
MRP : ₹ 630/-

Item Name : Paper Holder
Model : 11508
MRP : ₹ 1150/-

Item Name : Towel Rod
Model : 11509
MRP : ₹ 1100/-

Item Name : Towel Rack
Model : 11510
MRP : ₹ 3300/-

Brass Extension Nipples

Features :

- 56 Grade Full Brass
- Die Forging Technology
- High Grade Chrome Plating
- Perfect Accuracy & Extra Strong
- Allen Key Type
- Medium Weight Approx 40 gm per inch
- Heavy Weight Approx 50 gm per inch
- Weight Increases Proportionately as per inch

Model No : 500 - M

Size	MRP	Pcs Per Box	Pcs Per Ctn.
25 mm (1")	₹ 82/-	36	720
38 mm (1.5")	₹ 123/-	24	480
50 mm (2")	₹ 164/-	12	240
63 mm (2.5")	₹ 205/-	12	240
75 mm (3")	₹ 246/-	12	240
100 mm (4")	₹ 352/-	12	192
150 mm (6")	₹ 532/-	8	128

Model No : 600 - H

Size	MRP	Pcs Per Box	Pcs Per Ctn.
27 mm (1"+)	₹ 108/-	36	576
38 mm (1.5")	₹ 162/-	24	384
50 mm (2")	₹ 216/-	12	192
63 mm (2.5")	₹ 270/-	12	192
75 mm (3")	₹ 324/-	12	192
100 mm (4")	₹ 460/-	12	144
150 mm (6")	₹ 700/-	8	96

Model No : 501 - M - Italiano

Size	MRP	Pcs Per Box	Pcs Per Ctn.
25 mm (1")	₹ 86/-	36	720
38 mm (1.5")	₹ 129/-	24	480
50 mm (2")	₹ 172/-	12	240
63 mm (2.5")	₹ 215/-	12	240
75 mm (3")	₹ 258/-	12	240

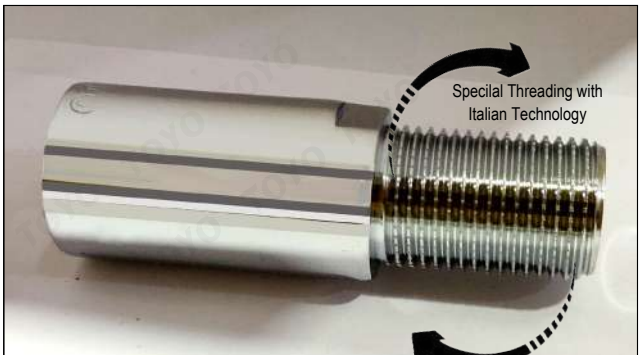

Model No : 601 - H - Italiano

Size	MRP	Pcs Per Box	Pcs Per Ctn.
27 mm (1"+)	₹ 112/-	36	576
38 mm (1.5")	₹ 168/-	24	384
50 mm (2")	₹ 224/-	12	192
63 mm (2.5")	₹ 280/-	12	192
75 mm (3")	₹ 336/-	12	192

Itam Name : Hex Nipple
Material : Brass with Chrome
MRP : ₹ 109/-

TOYO
SANITARY WARES

New Launch

HDHMR VANITES

TOYO®
SANITARY WARES

CE

CERTIFIED ISO 9001:2015 COMPANY

aroma
perfection &
excellence

Customer Care No :
18001020317

TOYO SANITARY WARES PVT.LTD.
Corporate office : W-5, Sector-11, Noida - 201301 (U.P)
Email : toyo@toyosanitarywares.com
Website : www.toyoindia.in